ENGINEERING
TOMORROW

Data Sheet

Motor operated valves and Actuators Type **ICM** and **ICAD**

65 bar/52 bar ICM motor valve equipped with ICAD actuator provides a higher suction pressure, and a much better COP, ultimately leading to significant energy savings

The motor operated ICM valve comprises four main components: Valve body, top cover, function module and Actuator. On ICM 20 – 65 the top cover and function module will be combined. ICM are motor operated valves driven by actuator type ICAD.

The sizes DN25 to DN65 are designed for MWP of 65 bar, while all other sizes have MWP of 52 bar.

ICM valves are designed to regulate an expansion process in liquid lines with or without phase change or control pressure or temperature in dry and wet suction lines and hot gas lines. ICM valves are designed so that the opening and closing forces are balanced, therefore, only two sizes of ICAD actuators are needed for the complete range of ICM from DN 20 to DN 150. The ICM motor operated valve and ICAD actuator assembly offers a very compact unit with small dimensions.

ICAD

Actuator types ICAD 600B and 1200B are dedicated for use with ICM motor operated valves. There are only two sizes of ICAD actuators that cover the range of valves from ICM 20 to ICM 150.

The ICAD is controlled via a modulating analogue signal (e.g. 4 – 20 mA / 2 – 10 V), a digital ON / OFF signal or via data communication (Modbus RTU (RS485) or TCP/IP (Ethernet)). ICAD B incorporates an advanced MMI (Man Machine Interface) display with descriptive text and Icons, which gives the user a very intuitive, advanced and flexible set up procedure that can meet different applications. In addition to the display interface, ICAD B also incorporates Bluethooth communication to a mobile app and data communication.

AI236186442940en-001601

Features

ICM valve

- Designed for industrial refrigeration applications for a maximum working pressure of:
  - ICS DN 25 to DN 65 (80): 65 bar / 943 psig
  - ICS DN 20 & DN 100 to DN 150: 52 bar / 754 psig
- Applicable to a wide range of HCFC, HFC, selected HC, R717 (Ammonia) and R744 (CO_2).
- Direct coupled connections
- Connection types include butt weld, socket weld, solder and threaded connections
- Low temperature steel body
- Low weight and compact design
- V-port regulating cone ensures optimum regulating accuracy particularly at part load
- Cavitation resistant valve seat on A cones in ICM 25-65 to be used for valves operating as expansion valves. For control valves both A and B cones are allowed. All ICM 20 with A, B and C cones can be used as expansion or control valves.
- Modular Concept
  - Each valve body is available with several different connection types and sizes
  - Valve overhaul is performed by replacing the function module (ICM 20 – 65)
  - Possible to convert ICM motor operated valve to ICS pilot operated servo valve
  - Spare parts available for ICM 100 – 150
- Manual opening possible via ICAD or Multifunction tool
- PTFE seat provides excellent valve tightness
- Magnet coupling - real hermetic sealing
- ICAD 600B / 1200B include encoder function that will provide a true valve position feedback to Danfoss controller or non-Danfoss control systems
- Classification: DNV, CRN, BV, EAC etc. To get an updated list of certification on the products please contact your local Danfoss Sales Company

ICAD actuator

- Designed for industrial refrigeration installations
- Advanced and high speed Digital Stepper Motor Technology
- High contrast LCD display and user friendly navigation keyboard
- Valve opening degree can be observed continuously
- Can easily be configured to different applications on-site (change speed, ON / OFF, Fail Safe operation, modulating valve, etc..)
- Open – Close time: 3– 45 seconds depending on valve size
- Modulating, ON / OFF operation or Neutral zone / 3 point control
- Multiple speed selection during operation
- Data connection via RS485 or Ethernet
- In addition to the onboard display, all configuration and readings from ICAD B actuators can be performed via Bluetooth (using Coolconfg mobile app) or via data communication
- Logging of all events, warnings and alarms
- Password protection
- Multiple control options: Analog signals (0–20 mA, 4–20 mA, 0–10 V, 2–10 V), digital signal (On-off) and data communication (RS485 & Ethernet)
- Position feed back : 0–20 mA, 4–20 mA (ICM and Data communication (RS485 & Ethernet))
- 3 Digital ON / OFF feedback
- Resolution: 20 micron / step (0.02 mm stroke pr. step)
- Total steps: 250–3650 depending on size
- Auto Calibration, Neutral zone
- In the event of a power failure, multiple fail safe options are possible. During power failure, ICM can be selected to:
  - Close ICM
  - Open ICM
  - Stay in the same position, as when power failure occurs
  - Go to a specific ICM valve opening degree

- Includes encoder function that provide a true valve position feedback to Danfoss controller or non-Danfoss control systems
- Hermetic magnetic motor
- Enclosure: IP67 ~ NEMA 6
- Approvals: CE, UL
- Connectors for easy installation and servicing
- Automatic Autodetection of valve where is mounted
- Quick Set up wizzard

Functions

ICM

Table 1: ICM valves

ICM 20	ICM 25-65	ICM 100 – 150
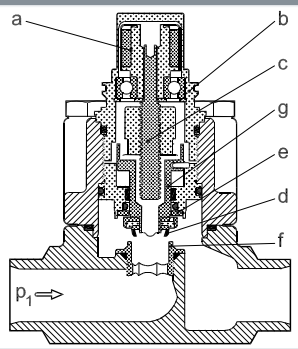	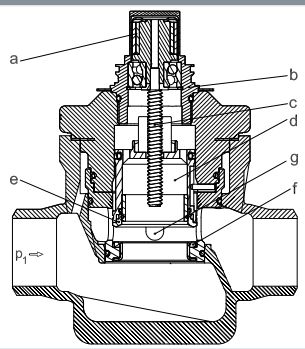	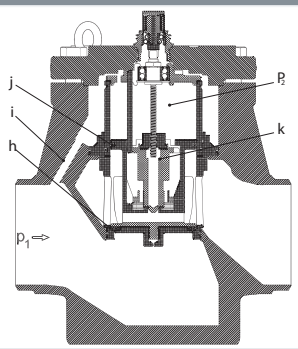

ICM, motor operated valves are designed for use with the ICAD actuator.

The driving force from the actuator is transferred via a magnetic coupling (a) through the stainless steel top housing (b) and thus eliminates the need for a packing gland. The rotational movement of the magnetic coupling (a) is transferred to a spindle (c) which in turn provides the vertical movement of the piston (d) and the valve seat (e), to open and close the valve. The closing force of the actuator, combined with the the valve seat (e) and PTFE valve plate (f), provides an effective seal to prevent leakage across the valve port, when the valve is in the closed position. To prevent damage to the PTFE valve seat (e) and plate (f) from system debris, it is recommended that a filter is installed upstream of the valve. Please refer to page 14 for filter sizing and application recommendations.

ICM 20 – 65:
Valve inlet pressure (P1) acting on the underside of the PTFE valve seat (e) also passes through the hollow piston assembly (d) on to the top of the piston (d) and balances the pressure acting on the piston (d). Any trapped liquid across the throttle cone (g) is allowed to equalise down to the valve outlet without affecting the valve performance.

ICM 100 – 150:
Valve inlet pressure (P1) acting on the underside of the PTFE valve plate (h) also passes through the equalization hole (i) and ensures that the servo piston (j) is pressure balanced. This will equalize P1 and P2. During an opening operation of the valve, the pilot piston (k) will be raised from its valve seat inside the servo piston (j). This allows the P2 pressure to escape through the servo piston (j) to the outlet of the valve. The pressure P1 will act on the underside of the servo piston (j) and force it to open. This will close the gap between the pilot piston (k) and the servo piston (j) until the pressures P1 and P2 are equalized again. When there is no pressure difference between P1 and the outlet of the valve the pilot piston (k) is attached to the servo piston (j) ensuring it to open up.

ICAD
There are two sizes of ICAD actuator that covers the range of valves from ICM 20 to ICM 150. The actuators have a fully weather protected enclosure with none of the moving parts exposed to the environment.

The fast acting actuators and balanced valve design results in the valve being able to move from the fully closed to the fully open position in between 3 to 45 seconds depending on valve size and ICAD setup.

Each body may be fitted with multiple function / top cover to give different capacities

Figure 1: Multiple function / top cover

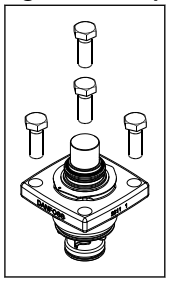

Table 2: Multiple function / top cover with capacities

Type	Valve body size	k_v (m^3/h)	C_v ($US_{gal/min}$)
ICM 20A-33	20	0.2	0.23
ICM 20-A		0.6	0.7
ICM 20-B66		1.6	1.9
ICM 20-B		2.4	2.8
ICM 20-C		4.6	5.3
ICM 25-A	25	6	7
ICM 25-A33		2	2.3
ICM 25-B		12	13.9
ICM 32-A	32	9	10.4
ICM 32-B		17	20
ICM 40-A	40	15	17
ICM 40-B		26	30
ICM 50-A	50	23	27
ICM 50-B		40	46
ICM 65-A	65	35	41
ICM 65-B		70	81
ICM 100-B	100	142	167
ICM 125-B	125	223	260
ICM 150-B	150	370	430

ICAD

The design of ICAD is based on a digital stepper motor technology combined with an advanced MMI (Man Machine Interface), that gives excellent possibilities for having a high degree of flexibility with the same type of ICAD actuator.

At the ICAD display the Opening Degree (0–100 %) of the actual ICM valve installed can be continuously observed.

The advanced menu system will allow several parameters to be ajusted to obtain the required function.

Many different parameters can be configurated, among these:
- Modulating, ON / OFF operation or Neutral zone / 3 point control
- Analog input
  - 0–20 mA or 4–20 mA
  - 0–10 V or 2–10 V
- Digital Input
  - ICAD can be configured to support one or two digital inputs
  - When using one digital input, 0 – 10 V can not be used at the same time
  - By using two digital inputs at Neutral zone / 3 point control, the analog input (0/2–10 V, 0/4–20 mA) and Analog Output (0/4–20 mA) can not be used at the same time
  - Data communication (RS485 & Ethernet)
- Position feedback
  - Analog output: 0–20 mA or 4–20 mA
  - Data communication (Rs485 & Ethernet)
- Automatic or manual control
- Change of ICM valve speed
- Automatic calibration
- Multiple Fail Safe set-up options during power cut

For service all Input and Output signals can be recalled and observed from the ICAD display via Bluetooth (using Coolconfig mobile app) or via data communication.

To avoid unintentional and non-authorised operation, ICAD uses a service password for the display and password for Coolconfig application.

ICAD can manage and display different alarms and warnings. If an alarm has been detected the display will show alarm/warning and LED light will start to flash in red (alarm) or yellow (warning). Blue light indicates ICAD is connected via Bluetooth. If more than one alarm is active at the same time the alarm with the highest priority will take preference. The alarm with the highest priority is shown on the display.

All alarms will automatically reset when disappearing.

Previous alarms and warnings can be recalled for traceability and service purposes.

Any active alarm will activate the common digital alarm output. All alarms will automatically reset when disappearing.

ICAD provides two digital output signals to 3rd party control equipment (e.g. PLC) indicating if the ICM valve is completely open or completely closed.

The hermetic magnetic motor coupling makes it easy to dismount the ICAD from ICM valve.

A magnetic coupled actuator is easily installed. Only two actuators are needed to cover the entire ICM program

Table 3: ICAD 600B and ICAD 1200B

ICAD 600B	ICAD 1200B
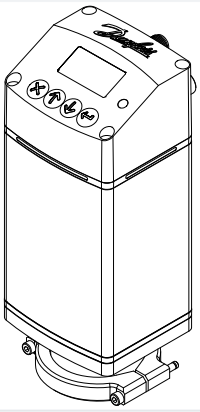	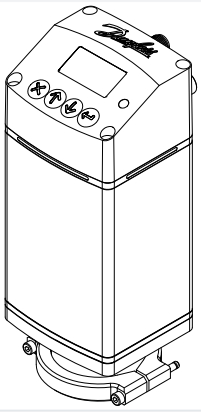

Applications

ICM

Figure 2: ICM Application

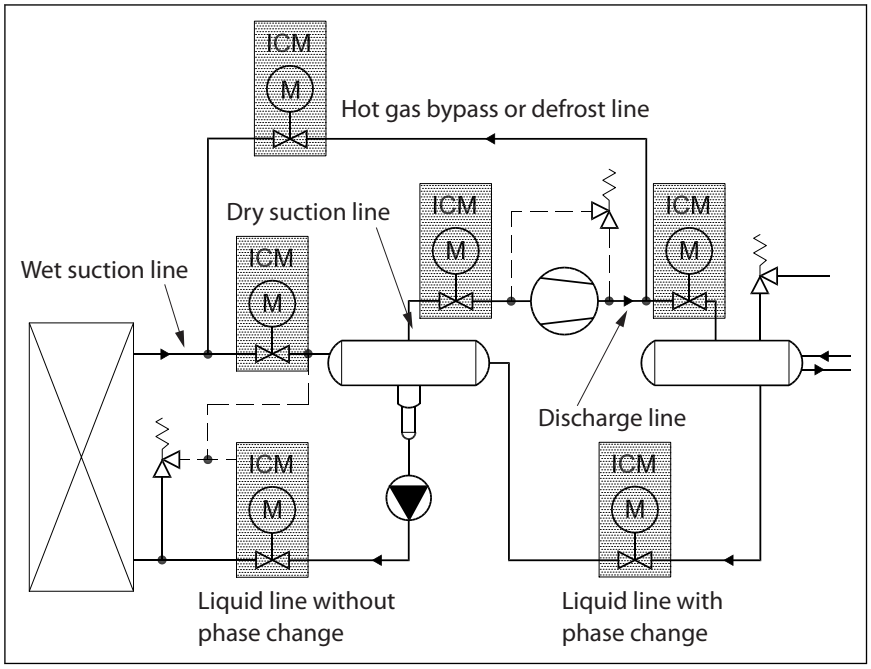

NOTE:
ICM can be used for pressure and temperature regulation in dry and wet suction lines, in hot gas lines and in liquid lines with or without phase change (i.e. where no expansion occurs in the valve).

Valve selection based on capacity calculation
As for extended capacity calculations and valve selection based on capacities and refrigerants, please refer to Coolselector®2. Rated and extended capacities with the Coolselector®2 calculation engine to ARI standards with the ASEREP equations based on laboratory measurements of selected valves.

Selection of ICM valves are available with Coolselector®2 selection program.

The process for identifying the ICM valve solution can be determined from the ordering pages. Initially select the nominal valve size, identify the required valve body and connection types, followed by the module insert and then the correct actuator to suit the module insert and valve body.

As the ICM and ICS valves use a common body it is possible to install the body without having previously determined whether a servo or motor function is required. A blank top cover complete with fixing screws can be supplied to allow for pressure testing.

In applications where the ICM is used to control pressure / temperature at differing operating conditions e.g. dual temperature store, the ICM must be selected so that the full operating conditions (minimum and maximum capacity / summer and winter conditions) are within the control range of the selected ICM valve.

It is particularly important to ensure that the ICM valve selection is not oversized and as a consequence operates at a minimum opening degree, which can result in a hunting condition and continuous recalibration of the ICM valve.

Cavitation resistant valve seat on A cones in ICM 25-65 to be used for valves operating as expansion valves. For control valves both A and B cones are allowed. All ICM 20 with A, B and C cones can be used as expansion or control valves.

NOTE:
ICM valves should be sized to suit required capacity and operating conditions. ICM valves should not be line sized.

For ICM 20 – 65 applications it is recommended that the valve opening degree at the minimum operating conditions is greater than 5%.

For ICM 100 – 150 applications it is recommended that the valve opening degree at the minimum operating conditions is greater than 10%.

Figure 3: Filter

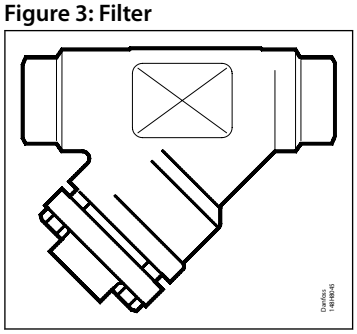

Table 4: Recommended filters

Recommended filters						Filter element for liquid line		Filter element for suction line	
						150 mesh	100 mesh	72 mesh	38 mesh
Filter Type	Size	D	A	FPT	SOC	100 my	150 my	250 my	500 my
FIA Straight-way	20 (¾ in.)	148B5343	148B5347	148B5349	148B5348	148H3122	148H3124	148H3126	148H3128
FIA Straight-way	25 (1 in.)	148B5443	148B5447	148B5449	148B5448	148H3123	148H3125	148H3127	148H3129
FIA Straight-way	32 (1 ¼ in.)	148B5544	148B5552	148B5549	148B5548	148H3123	148H3125	148H3127	148H3129
FIA Straight-way	40 (1 ½ in.)	148B5625	148B5644		148B5645	148H3123	148H3125	148H3127	148H3129
FIA Straight-way	50 (2 in.)	148B5713	148B5716		148B5717	148H3157	148H3130	148H3138	148H3144
FIA Straight-way	65 (2 ½ in.)	148B5813	148B5815				148H3131	148H3139	148H3145
FIA Straight-way	80 (3 in.)	148B5906	148B5908				148H3119	148H3120	148H3121
FIA Straight-way	100 (4 in.)	148B6007	148B6009				148H3132	148H3140	148H3146
FIA Straight-way	125 (5 in.)	148B6106	148B6108				148H3133	148H3141	148H3147
FIA Straight-way	150 (6 in.)	148B6203	148B6205				148H3134	148H3142	148H3148

ICAD

Figure 4: ICAD with cap above

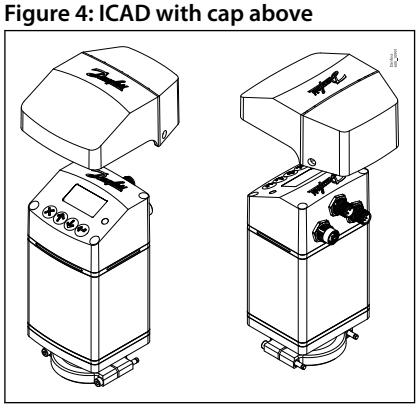

Figure 5: ICAD with cap on

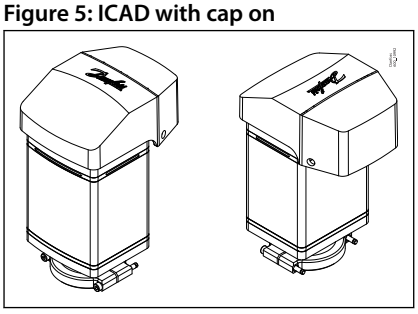

ICAD protection cap

For all outdoor applications or where extra protection of the display and keyboard is needed, Danfoss recommends using the ICAD protection cap.

The protection cap will give the ICAD display and keyboard an extra protection against e.g. sun radiation or other impacts from the surrounding environment. Furthermore it protects the cable connectors against inappropriate loads.

The special designed protection cap can be mounted on all ICAD 600B / 1200B.

The installation of the protection cap is done by sliding the protection cap down on the top of the ICAD. To secure the protection cap, tie it to the connector cables using the hole in the protection cap.

Figure 6: ICAD-UPS for ICM 20 – 150

ICAD-UPS for ICM 20 – 150
ICAD-UPS is dedicated for use along with ICM sizes 20 - 150 installed with ICAD 600B and ICAD 1200B actuators.

In the event of power failure, there is a need to make sure that the ICM goes to a safe position.

ICAD-UPS can be connected to the ICAD 600B / 1200B.

The solution ICM with ICAD connected to ICADUPS will give one of the following possibilities in the event of power failure:

- close ICM
- open ICM
- stay
- go to a specefic ICM Opening Degree

When power supply has been re-established the system will automatically return to normal operation.

Facts and features
- Industrial product
- Can support up to
  - 3 pcs. of ICAD 1200B or
  - 8 pcs. of ICAD 600B
- Integrated solution - battery and UPS
- Industrial approvals:
  - CE, UL
- DIN rail mounting
- LED status indication
- 24 V DC supply → Same transformer as for ICAD can be used
- Continuous monitoring of battery
- Integrated temperature sensor for optimized battery charging
- Adjustable buffer time [1]. (1, 2, 3, 5, 10, 15, 20 or infinity) = Ensures longer life time of the battery
- Forced remote shutdown in buffer mode via digital input
- 3 digital volt free relay change over contacts for signals to PLC systems. (Power OK, Buffer mode (failsafe supply to ICAD), Alarm).

[1] Buffer time is defined as the period where ICAD is only powered from the ICAD-UPS (i.e. not from main supply). On ICAD-UPS there is an adjustable buffer time setting (1, 2, 3, 5, 10, 15, 20, 30 min. or infinity). If set to 3, ICAD-UPS will switch off power to connected ICAD 600B / 1200B, 3 minutes after the power failure occurs. This ensures that the internal battery inside ICAD-UPS do not fully discharge.

Code number: **027H0388**

For further information please see the instruction ICAD-UPS

ICAD-UPS applications

Figure 7: Seperate 24 V DC tranformer for both ICAD-UPS and ICAD 600B / 1200B

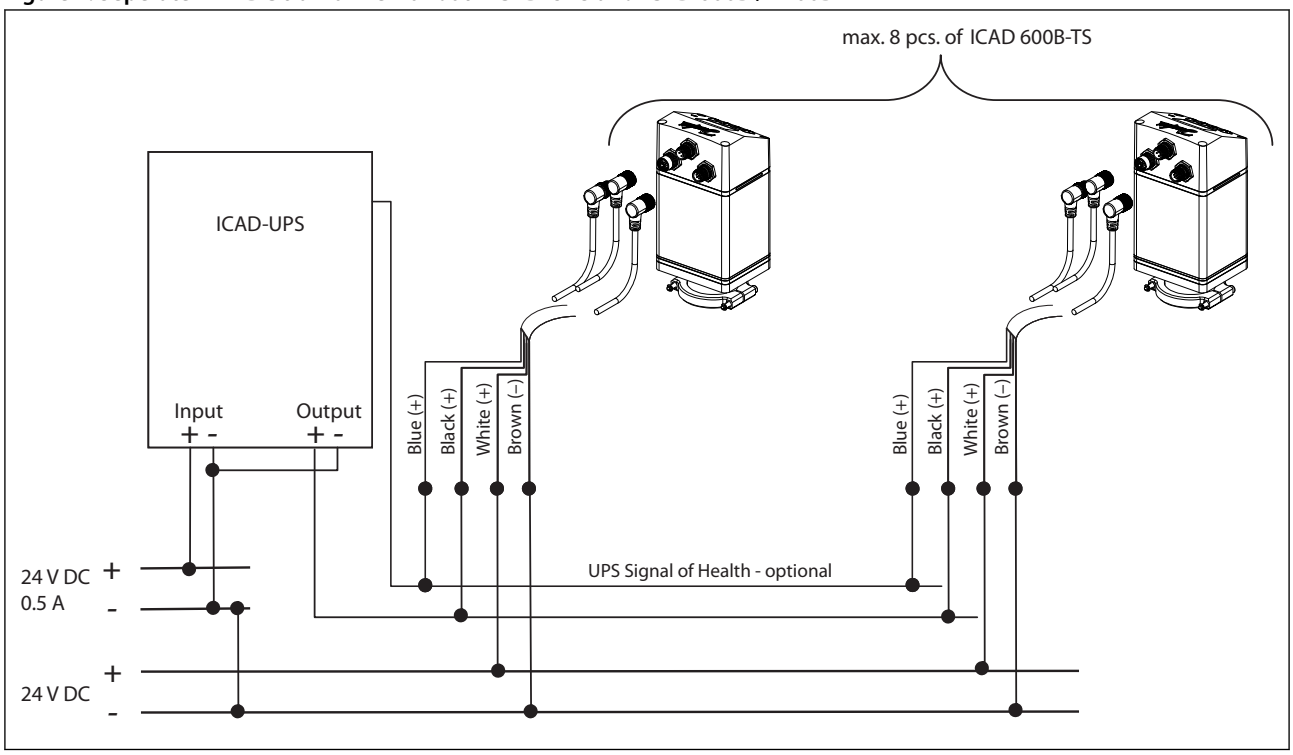

Figure 8: One 24 V DC tranformer for ICAD-UPS and ICAD 600B / 1200B

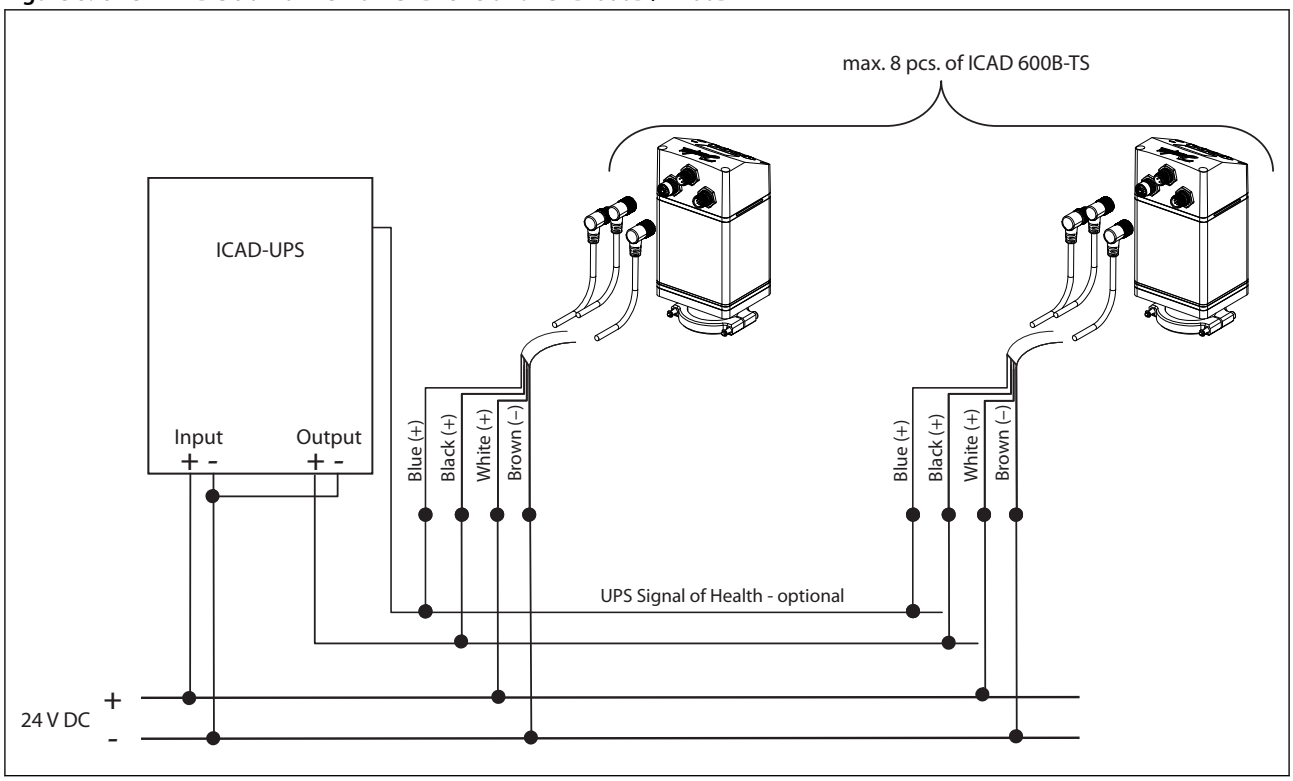

Media

Refrigerants

Applicable to a wide range of HCFC, non flammable HFC, R717 Ammonia , R744 CO_2, R1234ze and selected HC. For a detailed list see product store.

ICM valve is compatible with selected HC refrigerants, but it cannot be used in explosive or potentially explosive atmospheres. Specific refrigerants must be checked at store.danfoss.com, or by contacting your local Danfoss representative.

New refrigerants

Danfoss products are continually evaluated for use with new refrigerants depending on market requirements.

When a refrigerant is approved for use by Danfoss, it is added to the relevant portfolio, and the R number of the refrigerant (e.g. R513A) will be added to the technical data of the code number. Therefore, products for specific refrigerants are best checked at store.danfoss.com/en/, or by contacting your local Danfoss representative.

Product specification

Pressure and temperature data

ICM

Table 5: Pressure and temperature data

Description	Values
Media temperature range	Media: -60 / +120 °C (-76 / +248 °F). Please see additional details below under "! Important".
Max. working pressure	Size DN 25 to DN 65 (80): 65 bar (943 psig) Size DN 20 & DN 100 to DN 150: 52 bar (754 psig)

Max. openening pressure differential (MOPD)
- ICM 20-32: 52 bar / 750 psi
- ICM 40: 40 bar / 580 psi
- ICM 50: 30 bar / 435 psi
- ICM 65: 20 bar / 290 psi
- ICM 100 20 bar / 290 psi
- ICM 125 20 bar / 290 psi
- ICM 150 20 bar / 290 psi

Time to move from Closed to Open position or in reverse order with maximum selected speed at ICAD
- ICM 20: 3 Sec.
- ICM 25: 7 Sec.
- ICM 32: 8 Sec.
- ICM 40: 10 Sec.
- ICM 50: 13 Sec.
- ICM 65: 13 Sec.
- ICM 100: 25 Sec.
- ICM 125: 35 Sec.
- ICM 150: 45 Sec.

IMPORTANT:
Heat pump Applications
For heat pumps operating from 75°C to 100°C (167°F to 212°F), please be aware that the lifetime of the internal sealings will
be reduced.
Operation above 100 °C (212 °F) is not recommended.
To increase lifetime of internal sealing when operating from 75°C to 100°C (167°F to 212°F), please use ICM FFKM solution[2] with the following code numbers for valve inserts.

Table 6: ICM modules with FFKM O-ring

Sales codes	Description
027H1175	ICM 20 A33 Top assembly - FFKM[1]
027H1176	ICM 20 A Top assembly - FFKM[1]
027H1177	ICM 20 B Top assembly - FFKM[1]
027H1178	ICM 20 C Top assembly - FFKM[1]
027H1179	ICM 20 B66 Top assembly - FFKM[1]
027H2169	ICM 25 A33 Top assembly - FFKM[1]
027H2170	ICM 25 A Top assembly - FFKM[1]
027H3170	ICM 32 A Top assembly - FFKM[1]

NOTE:
For operation at higher temperatures, please contact Danfoss.

[2] FFKM solution includes FFKM o-ring under piston ring. All other o-rings are made of Chloroprene material.

ICAD

Table 7: Temperature and enclosure data

Description	Values
Temperature range (ambient)	-30 / +50 °C (-22 / +122 °F)
Enclosure	IP 67 (~NEMA 6)

Design

ICM

Valve body and top cover material
Low temperature steel

Surface protection
ICM 20 – 150: The external surface is zinc-chromated to provide good corrosion protection.

ICAD

Materials

Housing
Aluminium

Top part of ICAD
PBT thermo plastic

Weight
- **ICAD 600B:** 1.6 kg / 3.53 lb
- **ICAD 1200B:** 2.3 kg / 5.06 lb

The ICM Concept

The ICM concept is developed around a modular principle. This gives the possibility of combining function modules and top covers with special valve body size that is available in a variety of connection possibilities.

There are nine valve bodies available.

Table 8: Valve sizes

ICV 20	ICV 25	ICV 32	ICV 40	ICV 50	ICV 65
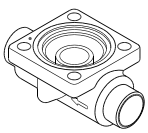	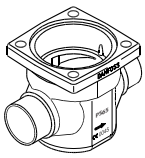	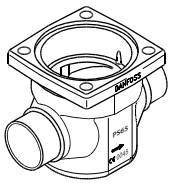	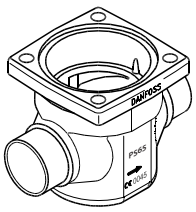	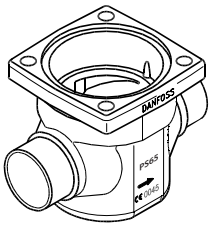	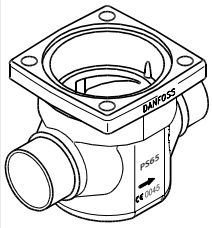

Table 9: Valve sizes

ICV 100	ICV 125	ICV 150
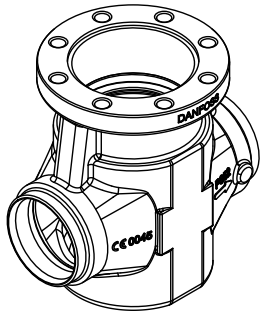	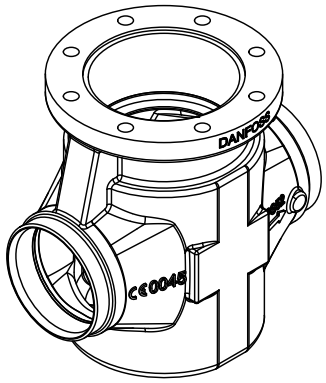	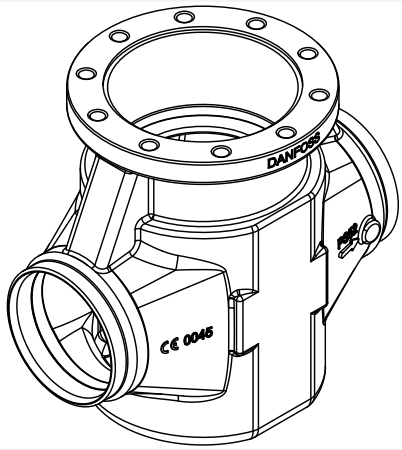

Valve bodies in the sizes ICV 20 – ICV 65 are available with a range of undersizes through oversized connection sizes and types.

ICV 100 – ICV 150 are available in butt-weld DIN and butt-weld ANSI nominal sizes.

Table 10: Connections

D	A	J	SOC	SD	SA	FPT
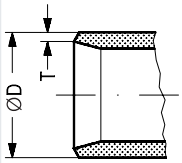	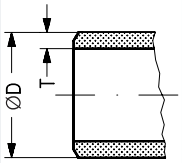	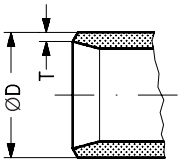	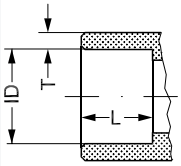	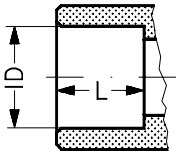	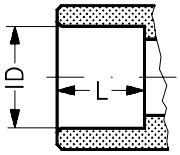	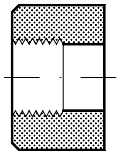
Butt-weld DIN	**Butt-weld ANSI**	**Butt-weld JIS**	**Socket weld ANSI**	**Solder DIN**	**Solder ANSI**	**Female Pipe Thread**

ICM motor and ICAD actuator combinations

The ICM motor operated valve and ICAD actuator combinations are as follows:

Table 11: Valve and actuator combination

Actuator	ICAD 600B	ICAD 1200B
Valve size	ICM 20	ICM 40
	ICM 25	ICM 50
	ICM 32	ICM 65
	-	ICM 100
	-	ICM 125
	-	ICM 150

ICAD 600B / ICAD 1200B

ICAD actuators can be controlled using the following signals:

- 0 – 20 mA
- 4 – 20 mA (default)
- 0 – 10 V
- 2 – 10 V
- One or two digital Input
- Via data communication:
  - Modbus RTU (RS485)
  - Modbus TCP/IP (Ethernet)

ICAD actuators can operate an ICM valve as an On / Off function supported by one digital input.

ICAD actuators can operate an ICM valve as Neutral zone / 3 point control supported by two digital inputs.

The ICM valve can be operated manually via the ICAD actuator or the Multi-function tool for ICM (see the ordering section).

Fail Safe supply options
In the event of a power failure, multiple fail safe options are possible, provided that a ICAD-UPS or similar is used.

During power failure, ICM can be selected to:
- Close ICM
- Open ICM
- Stay in the same position, as when power failure occurs
- Go to a specific ICM valve opening degree

See the section ICAD UPS for further information.

NOTE:
A fail safe supply (battery or UPS) is required.

Electrical

ICAD

Electrical connection
Connection to ICAD is done via M12 connectors. ICAD has three M12 connectors build-in:

Power supply
4 poled M12 male connector

Control signals
8 poled M12 male connector

Data communication
4 poled M12 female connector

ICAD is delivered without cables .They are to be delivered separately. Cables are equipped with M12 connectors
Power Supply cable with 4 poled M12 female connector: 4 x 0.34 mm^2 (3 x ~22 AWG)
Control cable with 8 poled M12 female connector: 7 x 0.25 mm2 (7 x ~24 AWG)
Data communication cable with 4 poled M12 female connector: 4 x 0.08 mm^2 (4 × ~26 AWG)
Cable set with M12 connectors in other lengths are available. See the section "Spare parts and accessories".

Please observe cable voltage drop
Distance between the applied DC transformer and the ICAD terminal box may cause a voltage drop. Cross section of cables and size of DC transformer must be calculated so that the voltage at all time **at the ICAD terminal box** [3], both during standstill and during operation of ICAD, is within this range:

Table 12: Voltage at all time at the ICAD terminal box

Prefabricated ICAD cable length Code number		1.5 m 027H0426	3 m 027H0438	10 m 027H0427	15 m 027H0435	
Voltage ICAD terminal (600B / 1200B) [V DC]	Min.	21	22	23	24	
	Max.	26.4				

Supply voltage is galvanic isolated from Input/Output

Supply voltage: see Table 12
Load:
- ICAD 600B: 1.2 A
- ICAD 1200B: 2.0 A

Fail safe supply:
24 V DC (Tolerances)

[3] Do not measure inside the ICAD itself

Table 13: Load

ICAD 600B, ICAD 600B-TS	1.2 A
ICAD 1200B	2.0 A

Data communication (RS485/Ethernet)
It is important that the installation of the data communication cable is done correctly. Remember termination at the bus termination.

RS485: Max length of cable: 1200 m with specific cable and limited data rate. Follow RS485 standard.

Insulation from power supply input, metallic part and interface output: 500 V DC: For input/output connections.

Analogue Input - Current or Voltage

Table 14: Current

Input range	0/4–20 mA
Max input range	0–24 mA
Input resistance	120 Ω + diode voltage 0.7 V DC
Measurement error	<±1.5% of the full scale
Reverse polarity protection	yes
Overcurrent protection	yes

Table 15: Voltage

Input range	0/2–10 V DC
Max input range	0–12 V DC
Measurement error	<±1.5% of the full scale
Reverse polarity protection	yes

Analogue Output

Table 16: Current

Output range	0/4–20 mA
Load	<800 Ω
Output error	<±1.5% of the full scale
Recommended external resistor for Hot application	Rext=800 Ω-load 1W power rate

Digital Input

Digital ON/OFF input by means of voltfree contact (Signal/Telecom relays with gold-plated contacts recommended) – Voltage input used.

Table 17: Current

Rth rise(OFF)	>10 kΩ
Rth fall(ON)	< 45 Ω

Digital Output

Digital Output - 3 pcs. NPN transistor output.

External supply
7–24 V DC (same supply as for ICAD can be used, but please note that the galvanically isolated system will then be spoiled).

On resistance
55 Ω + diode voltage 0.7 V DC
Max 70 Ω at 50 mA
Max Output current: 50 mA
Reverse polarity protection: Yes
Overcurrent protection: No

Cable connection

There are three cables which are connected to the ICAD motor with M12 connectors:

Figure 9: Cable Connectors

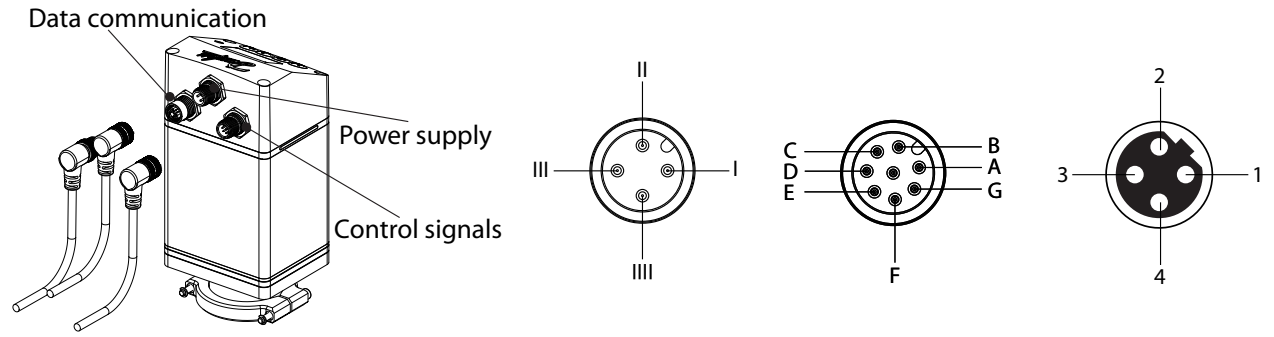

Figure 10: ICAD back Description

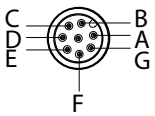

ICAD back	Ref	Color		Description	
	A	Black	-	Common alarm	Digital output
	B	Brown	-	ICM fully open	
	C	Red	-	ICM fully closed	
	D	Orange	-	GND ground	
	E	Yellow	+	0/4 –20 mA Input	
	F	Green	+	0/2 – 10 V input or digital input for on/off control	
	G	Blue	+	0/4 – 20 mA Output	

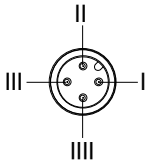

I	Black	+	Fail safe supply. Battery / UPS* 19 V DC
II	White	+	Supply voltage 24 V DC 2A, or more, per ICAD recommended ICAD PSU must be SELV**, >15 W
III	Brown	-	
IIII	Blue	+	UPS Signal of Health - optional depending on ID31: 'UPS supply' set to 'Yes'

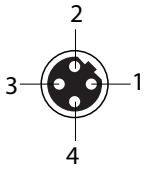

RS485/ Ethernet

1	White/Blue	(-) / TX+	Data – (B) / Transmit Pair(+)
2	White/Orange	GND / RX+	Ground / Receiving Pair(+)
3	Blue	(+) / TX-	Data + (A) / Transmit Pair(-)
4	Orange	GND / RX-	Ground / Receiving Pair(-)

*Uniterruptable Power Supply
**The ICAD is a class III appliance

Material specification

Table 18: ICM specification

ICM 20	ICM 25-65	ICM 100 – 150
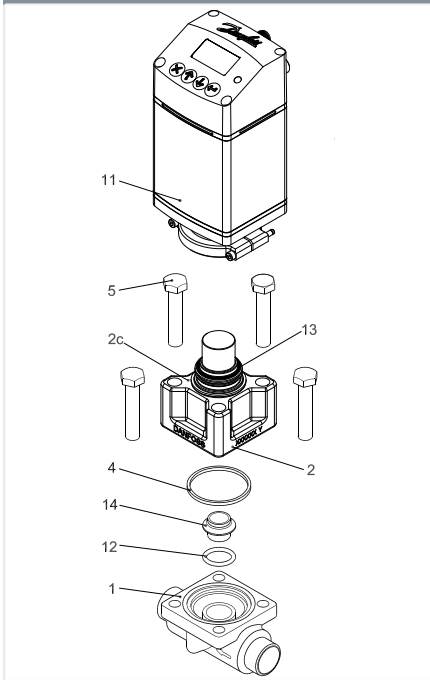	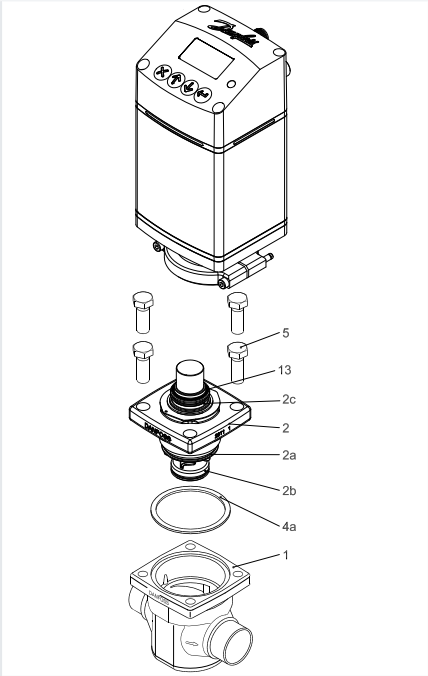	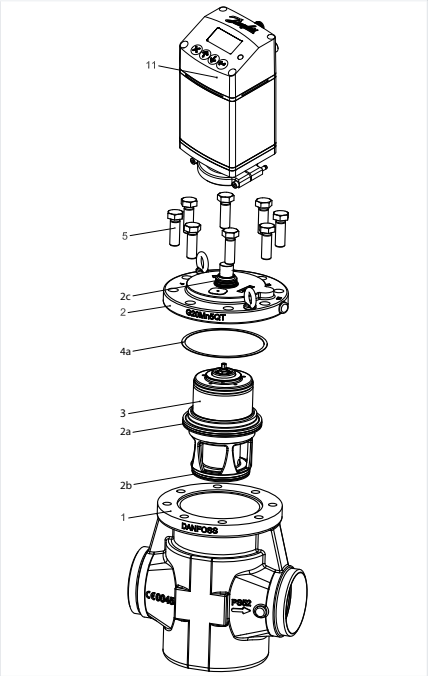

No.	Part	Material	EN	ASTM	JIS
1	Housing	Low temperature steel	G20Mn5QT, EN 10213-3	LCC, A352	SCPL1, G5151
2	Top cover	Low temperature steel	G20Mn5QT, EN 10213-3	LCC, A352	SCPL1, G5151
2a	O-ring	Chloroprene (Neoprene)			
2b	O-ring	Chloroprene (Neoprene)			
2c	O-ring	Chloroprene (Neoprene)			
3	Function module				
4	Gasket	Chloroprene (Neoprene)			
4a	Gasket	Fiber, non-asbestos			
5	Bolts	Stainless steel	A2-70, EN 1515-1	Grade B8 A320	A2-70, B 1054
11	Actuator				
12	O-ring	Chloroprene (Neoprene)			
13	O-ring	Chloroprene (Neoprene)			
14	Seat	High density polymer			

NOTE:

Table 19: Bolt sizes (pos. 5)

Type	Screw	Type	Screw
ICM 20	M10 × 55 A2-70 DIN 931	ICM 100	M20 × 60 A2-70 DIN 933
ICM 25	M12 × 30 A2-70 DIN 933	ICM 125	M20 × 60 A2-70 DIN 933
ICM 32	M14 × 35 A2-70 DIN 933	ICM 150	M20 × 70 A2-70 DIN 933
ICM 40	M14 × 35 A2-70 DIN 933		
ICM 50	M16 × 40 A2-70 DIN 933		
ICM 65	M16 × 40 A2-70 DIN 933		

Connections

There is a very wide range of connection types available with ICM valves:

- **D**: Butt weld, EN 10220
- **A**: Butt weld, ANSI (B 36.10)
- **J**: Butt weld, JIS (B S 602)
- **SOC**: Socket weld, ANSI (B 16.11)

- **SD**: Solder connection, EN 1254-1
- **SA**: Solder connection, ANSI (B 16.22)
- **FPT**: Female pipe thread (ANSI/ASME B 1.20.1)

Table 20: Connections

D	A	J	SOC	SD	SA	FPT
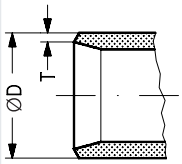	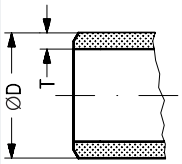	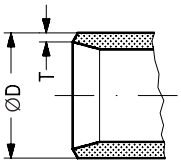	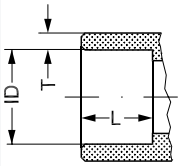	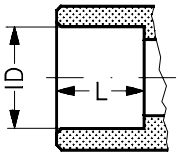	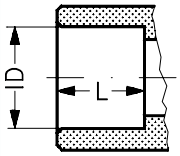	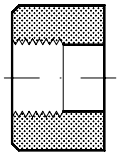
Butt-weld DIN	**Butt-weld ANSI**	**Butt-weld JIS**	**Socket weld ANSI**	**Solder DIN**	**Solder ANSI**	**Female Pipe Thread**

Table 21: D: Butt-weld DIN (2448)

Size	Size	ØD	T	ØD	T
mm	in.	mm	mm	in.	in.
20	(¾)	26.9	2.3	1.059	0.091
25	1	33.7	2.6	1.327	0.103
32	1 ¼	42.4	2.6	1.669	0.102
40	1 ½	48.3	2.6	1.902	0.103
50	2	60.3	2.9	2.37	0.11
65	2 ½	76.1	2.9	3	0.11
80	3	88.9	3.2	3.5	0.13
100	4	114.3	3.6	4.5	0.14
125	5	140.7	4	5.5	0.16
150	6	168.3	6.3	6.6	0.25

Table 22: A: Butt-weld ANSI (B 36.10)

Size	Size	ØD	T	ØD	T	Schedule
mm	in.	mm	mm	in.	in.	
20	¾	26.9	4	1.059	0.158	80
25	1	33.7	4.6	1.327	0.181	80
32	1 ¼	42.4	4.9	1.669	0.193	80
40	1 ½	48.3	5.1	1.902	0.201	80
50	2	60.3	3.9	2.37	0.15	40
65	2 ½	73	5.2	2.87	0.2	40
80	3	88.9	5.5	3.5	0.22	40
100	4	114.3	6	4.5	0.24	
125	5	140.7	6.5	5.5	0.26	
150	6	168.3	7.1	6.6	0.28	

Table 23: J: Butt-weld JIS

Size	Size	ØD	T	ØD	T
mm	in.	mm	mm	in.	in.
20	¾	26.9	4	1.059	0.158
25	1	33.7	4.6	1.327	0.181
32	1 ¼	42.4	4.9	1.669	0.193
40	1 ½	48.3	5.1	1.902	0.201
50	2	60.3	3.9	2.37	0.15
65	2 ½	76.3	5.2	3	0.2
80	3	88.9	5.5	3.5	0.22

Table 24: SOC: Socket welding ANSI (B 16.11)

Size	Size	ID	T	ID	T	L	L
mm	in.	mm	mm	in.	in.	mm	in.
20	¾	27.2	4.6	1.071	0.181	13	0.51
25	1	33.9	7.2	1.335	0.284	13	0.51
32	1 ¼	42.7	6.1	1.743	0.24	13	0.51
40	1 ½	48.8	6.6	1.921	0.26	13	0.51
50	2	61.2	6.2	2.41	0.24	16	0.63
65	2 ½	74	8.8	2.91	0.344	16	0.63

Table 25: SD: Soldering (DIN 2856)

Size	ID	L
mm	mm	mm
16	16.07	15
22	22.08	16.5
28	28.08	26
35	35.07	25
42	42.07	28
54	54.09	33
76	76.1	33

Table 26: SA: Soldering (ANSI B 16.22)

Size	ID	L
in.	in.	in.
⅝	0.625	0.591
⅞	0.875	0.65
1 ⅛	1.125	1.024
1 ⅜	1.375	0.984
1 ⅝	1.625	1.102
2 ⅛	2.125	1.3
2 ⅝	2.625	1.3

Table 27: FPT: Female pipe thread, (ANSI/ASME B 1.20.1)

Size	Size	Inside pipe thread
mm	in.	
20	¾	(¾ x 14 NPT)
25	1	(1 x 11.5 NPT)
32	1 ¼	(1 ¼ x 11.5 NPT)

Dimensions and weights

ICM 20-32 / ICAD 600B

Figure 11: ICM 20 / ICAD 600B

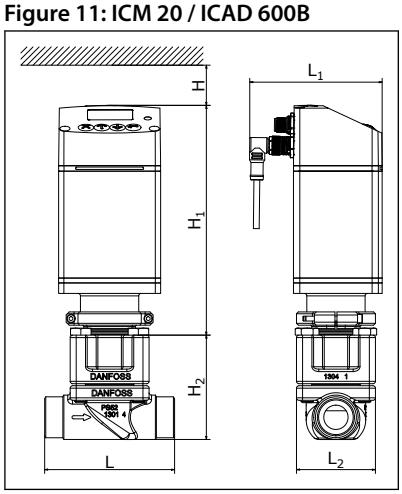

Figure 12: ICM 25 / ICAD 600B

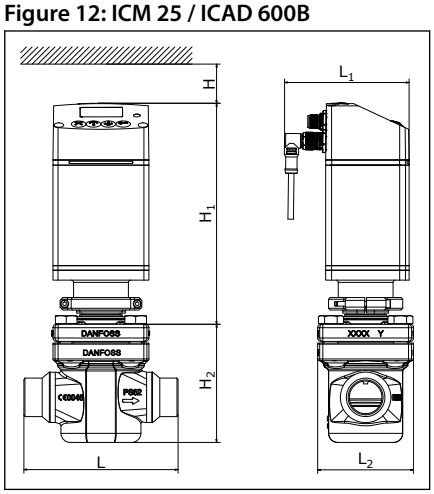

Figure 13: ICM 32 / ICAD 600B

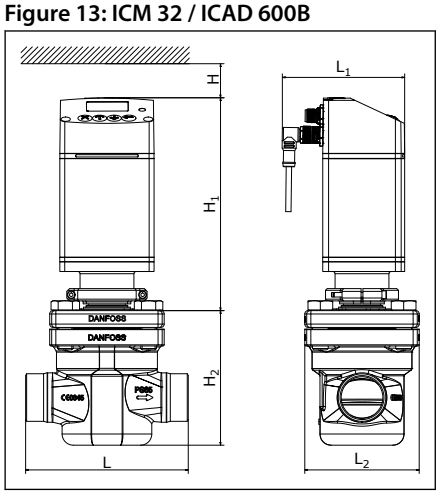

Table 28: Dimensions

ICM size		H	H_1	H_2	L	L_1	L_2	Weight ICM incl. ICAD
ICM 20	mm	40	190	85	107	110	65	3,4 kg
	in.	1.58	7.48	3.35	4.21	4.33	2.56	7.5 lb.
ICM 25	mm	40	190	99	135[1]	110	84	4.5 kg
	in.	1.58	7.48	3.9	5.31[1]	4.33	3.31	9.9 lb.
ICM 32	mm	40	190	117	145[2]	110	110	6.2 kg
	in.	1.58	7.48	4.61	5.71[2]	4.33	4.33	13.7 lb.

[1] Exceptions: 147 mm (5.79 in.) for valve with connectors 28 SD (1 1⁄8 in.), 28 SA (1 1⁄8 in.) and 35 SD (1 3⁄8 in. SA); 148 (5.83 in.) mm for 25 SOC (1 in.)
[2] Exceptions: 147 mm (5.79 in.) for valve with connectors 32 SOC (1 1⁄4 in.), 148 mm (5.83 in.) for 35 SD (1 3⁄8 in. SA), 42 SD (1 5⁄8 in.) and 42 SA (1 5⁄8 in.).

ICM 40-65 / ICAD 1200B

Figure 14: ICM 40 / ICAD 1200B

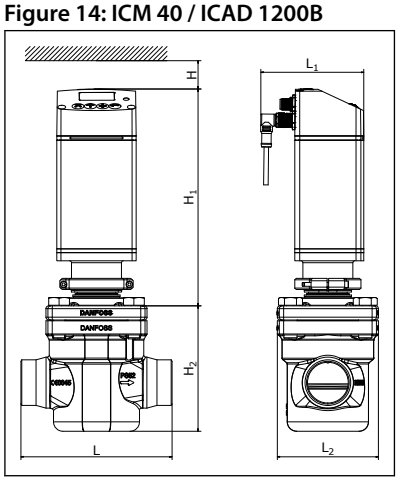

Figure 15: ICM 50 / ICAD 1200B

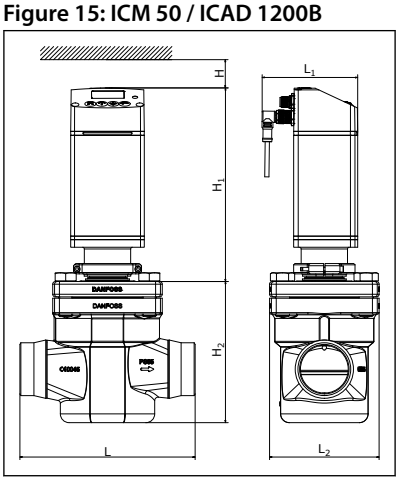

Figure 16: ICM 65 / ICAD 1200B

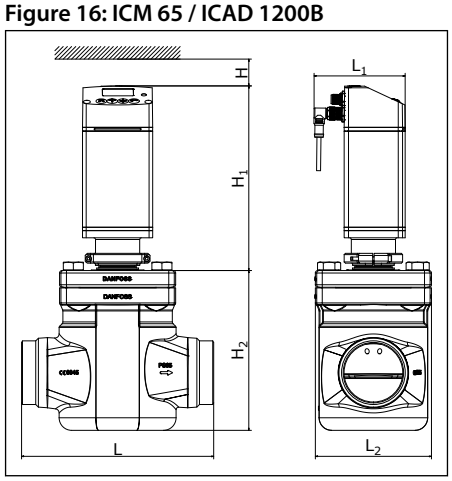

Table 29: Dimensions

ICM size		H	H_1	H_2	L	L_1	L_2	Weight ICM incl. ICAD
ICM 40	mm	45	237	131	180[1]	110	107	8.4 kg
	in.	1.77	9.33	5.16	7.09[1]	4.33	4.21	18.5 lb.
ICM 50	mm	45	237	159	200[2]	110	125	11.7 kg
	in.	1.77	9.33	6.26	7.87[2]	4.33	4.92	25.8 lb.
ICM 65	mm	45	237	188	230[3]	110	139	17.2 kg
	in.	1.77	9.33	7.4	9.06[3]	4.33	5.47	80.5 lb

[1] Exceptions: 160 mm (6.3 in.) for valve with connectors 40 D (1 1⁄2 in.) and 40 A (1 1⁄2 in.)
[2] Exceptions: 210 mm (8.27 in.) for valve with connectors 65 D (2 1⁄2 in.) and 65 A (2 1⁄2 in.); 216 mm (8.5 in.) for 50 SOC (2 in.) and 54 SD (2 1⁄8 in. SA)
[3] Exceptions: 245 mm (9.65 in.) for valve with connectors 80 D (3 in.), 80 A (3 in.), 76 SD (3 in.), 67 SA (2 5⁄8 in.)

ICM 100-150 / ICAD 1200B

Figure 17: ICM 100 / ICAD 1200B

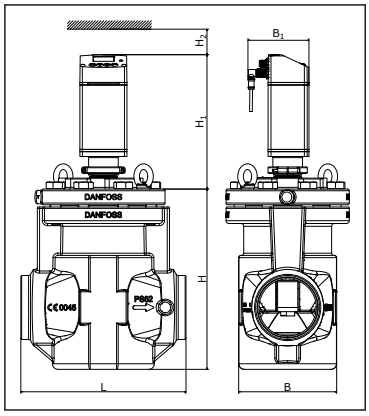

Figure 18: ICM 125 / ICAD 1200B

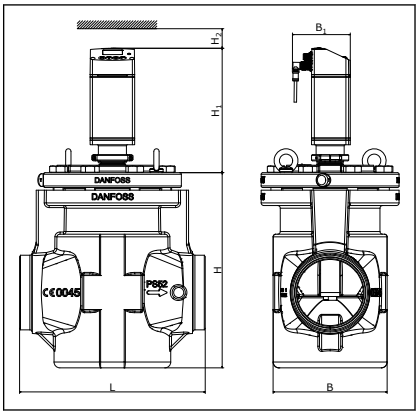

Figure 19: ICM 150 / ICAD 1200B

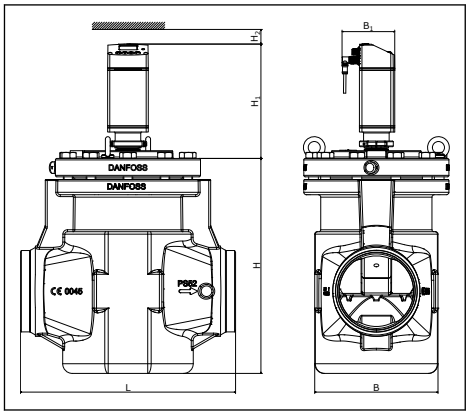

Table 30: Dimensions

ICM size		H	H_1	H_2	L	B	B_1	Weight ICM incl. ICAD
ICM 100	mm	321	256	45	295	175	110	44 kg.
	in.	12.64	10.01	1.77	11.61	6.89	4.33	97 lb.
ICM 125	mm	365	256	45	350	215	110	55 kg
	in.	14.37	10.01	1.77	13.78	8.47	4.33	121 lb.
ICM 150	mm	443	256	45	445	255	110	95 kg
	in.	17.77	10.01	1.77	17.52	10.04	4.33	209 lb.

NOTE:
Weight presented in tables 28-30 is approximated only

Ordering

Ordering from the parts programme

ICM 20 / ICAD 600B

Table 31: Example (select from table I, II and III)

Valve body 22 SD (7/8 in.) 027H1154 Table 32		Top cover/function module ICM 20-B 027H1181 Table 33		Actuator 027H0485 Table 34		
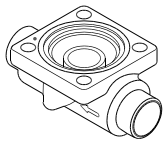	+	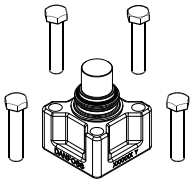	+	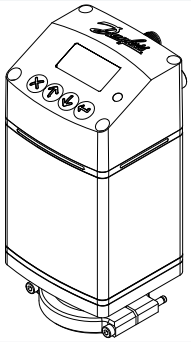	=	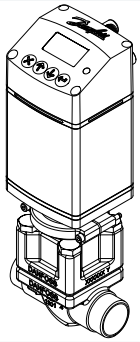

Figure 20: ICV 20 valve body

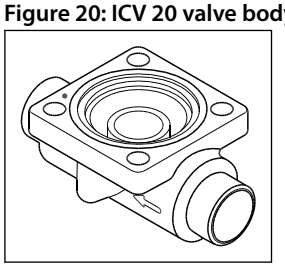

Table 32: ICV 20 valve body w/different connections Table I

20 D (3/4 in.)	**25 D (1 in.)**	**20 A (3/4 in.)**	**20 SOC (3/4 in.)**
027H1145	027H1163	027H1148	027H1151
16 SA (5/8 in.)	**22 SA (7/8 in.)**	**16 SD (5/8 in.)**	**22 SD 7/8 in.)**
027H1129	027H1160	027H1132	027H1154
20 FPT (3/4 in.)		**25 A (1 in.)**	
027H1157		027H1166	

NOTE:

D = Butt-weld DIN ; A = Butt-weld ANSI ; J = Butt-weld JIS ; SOC = Socket weld ANSI ; SD = Solder DIN ; SA = Solder ANSI ; FPT = Female Pipe Thread

Figure 21: ICM 20

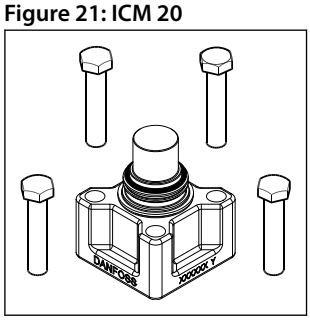

Table 33: ICM 20 Function module / top cover Table II

Description	Code Number
ICM 20-A33	027H1186[1]
ICM 20-A	027H1180[1]
ICM 20-B66	027H1194[1]
ICM 20-B	027H1181[1]
ICM 20-C	027H1182[1]

[1] Bolts and O-ring (for assembly with ICV valve body) Seat and O-ring (for seat to be mounted in ICV valve body)

Figure 22: Actuator ICAD 600B

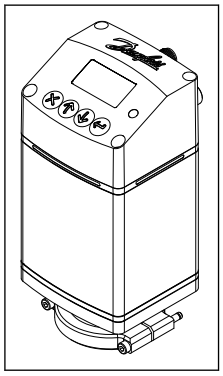

Table 34: Actuator ICAD 600B Table III

Type	Code no.
ICAD 600B with display, Bluetooth, RS485	027H0485
ICAD 600B with display, Bluetooth, Ethernet	027H0486
ICAD 600B, without display, Bluetooth, RS485	027H0488
ICAD 600B, without display,Bluetooth, Ethernet	027H0489

NOTE:
Cables should be ordered separately. Please see ICAD B data sheet Motor actuator for ICM/ICM-TS motorized valves and CVE pilot valve

Ordering complete factory assembled valve without actuator

Figure 23: Valve without actuator

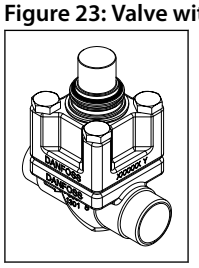

Table 35: Body, function module/top cover Table A

	Available connections									
Type	**20 D (¾ in.)**	**25 D (1 in.)**	**20 A (¾ in.)**	**20 SOC (¾ in.)**	**16 SA (⅝ in.)**	**22 SA (⅞ in.)**	**16 SD (⅝ in.)**	**22 SD (⅞ in.)**	**20 FPT (¾ in.)**	**25 A (1 in.)**
ICM 20-A	027H1030	027H1020	027H1035	027H1040	[2]	027H1050	[2]	027H1045	[2]	[2]
ICM 20-B	027H1031	027H1021	027H1036	027H1041	[2]	027H1051	[2]	027H1046	[2]	[2]
ICM 20-C	027H1032	027H1022	[2]	[2]	[2]	027H1052	[2]	027H1047	[2]	027H1025

[2] Select from parts programme

ICM 25 / ICAD 600B

Table 36: Example (select from table I, II and III)

Valve body 32 D (1¼ in.) 027H2129 Table 37		Top cover/function module ICM 25-B 027H2181 Table 38		Actuator 027H0485 Table 39		
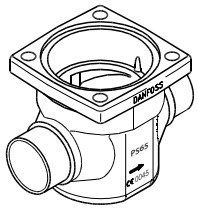	+	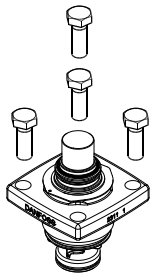	+	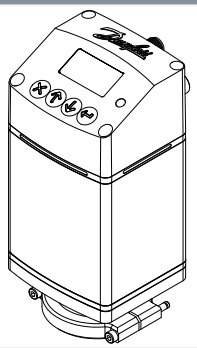	=	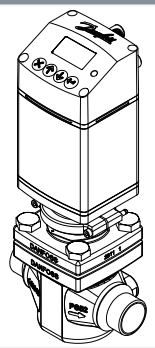

Figure 24: ICV 25 valve body

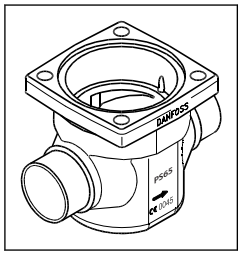

Table 37: ICV 25 valve body w/different connections Table I

20 D (¾ in.)	**25 D (1 in.)**	**32 D (1 ¼ in.)**	**40 D (1 ½ in.)**
027H2128	027H2120	027H2129	027H2135
35 SD (1 ⅜ in. SA)	**28 SA (1 ⅛ in.)**	**22 SA (⅞ in.)**	**28 SD (1 ⅛ in.)**
027H2134	027H2126	027H2125	027H2124
22 SD (⅞ in.)	**20 A (¾ in.)**	**25 A (1 in.)**	**32 A (1 ¼ in.)**
027H2123	027H2131	027H2121	027H2130
20 SOC (¾ in.)	**25 SOC (1 in.)**	**20 FPT (¾ in.)**	**25 FPT (1 in.)**
027H2132	027H2122	027H2133	027H2127

NOTE:

D = Butt-weld DIN ; A = Butt-weld ANSI ; J = Butt-weld JIS ; SOC = Socket weld ANSI ; SD = Solder DIN ; SA = Solder ANSI ; FPT = Female Pipe Thread

Figure 25: ICM 25

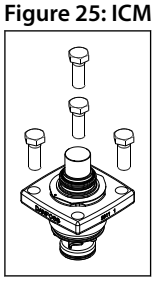

Table 38: ICM 25 Function module / top cover Table II

Description	Code Number
ICM 25-A	027H2180[1]
ICM 25-A33	027H2190[1]
ICM 25-B	027H2181[1]

[1] Including gasket and O-rings

Figure 26: Actuator ICAD 600B

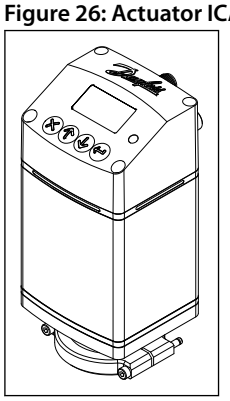

Table 39: Actuator ICAD 600B Table III

Type	Code no.
ICAD 600B with display, Bluetooth, RS485	027H0485
ICAD 600B with display, Bluetooth, Ethernet	027H0486
ICAD 600B, without display, Bluetooth, RS485	027H0488
ICAD 600B, without display,Bluetooth, Ethernet	027H0489

NOTE:
Cables should be ordered separately. Please see ICAD B data sheet Motor actuator for ICM/ICM-TS motorized valves and CVE pilot valve

Ordering complete factory assembled valve without actuator

Figure 27: Valve without actuator

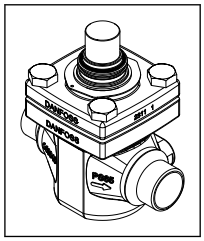

Table 40: Body, function module / top cover Table A

Available connections								
Type	**20 D (¾ in.)**	**25 D (1 in.)**	**32 D (1 ¼ in.)**	**40 D (1 ½ in.)**	**35 SD (1 ⅜ in. SA)**	**28 SA (1 ⅛ in.)**	**22 SA (⅞ in.)**	**28 SD (1 ⅛ in.)**
ICM 25-A	[1]	027H2000	[1]	027H2016	027H2014	027H2012	027H2010	027H2008
ICM 25-B	[1]	027H2001	[1]	[1]	027H2015	027H2013	027H2011	027H2009
	22 SD (⅞ in.)	**20 A (¾ in.)**	**25 A (1 in.)**	**32 A (1 ¼ in.)**	**20 SOC (¾ in.)**	**25 SOC (1 in.)**	**20 FPT (¾ in.)**	**25 FPT (1 in.)**
ICM 25-A	027H2006	[1]	027H2002	[1]	[1]	027H2004	[1]	[1]
ICM 25-B	027H2007	[1]	027H2003	[1]	[1]	027H2005	[1]	[1]

[1] Select from parts programme

ICM 32 / ICAD 600B

Table 41: Example (select from table I, II and III)

Valve body 40 D (1½ in.) 027H3125 Table 42		Top cover/function module ICM 32-A 027H3180 Table 43		Actuator 027H0485 Table 44		
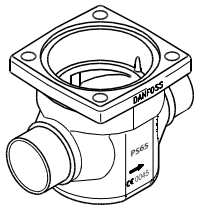	+	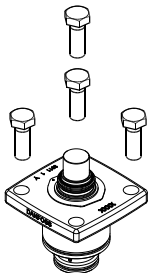	+	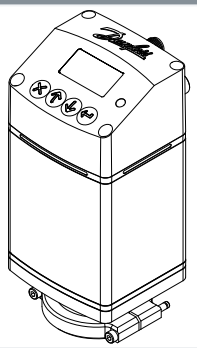	=	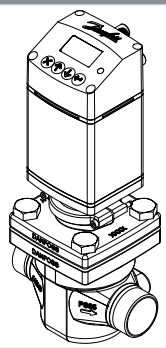

Figure 28: ICV 32 valve body

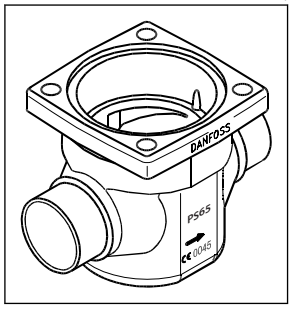

Table 42: ICV 32 valve body w/different connections Table I

32 D (1 ¼ in.)	**40 D (1 ½ in.)**	**42 SA (1 ⅝ in.)**	**42 SD (1 ⅝ in.)**
027H3120	027H3125	027H3127	027H3128
35 SD (1 ⅜ in. SA)	**32 A (1 ¼ in.)**	**32 SOC (1 ¼ in.)**	**40 A (1 ½ in.)**
027H3123	027H3121	027H3122	027H3126

NOTE:

D = Butt-weld DIN ; A = Butt-weld ANSI ; J = Butt-weld JIS ; SOC = Socket weld ANSI ; SD = Solder DIN ; SA = Solder ANSI ; FPT = Female Pipe Thread

Figure 29: ICM 32

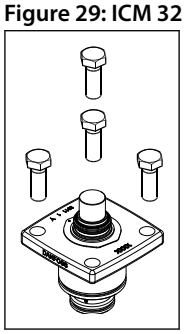

Table 43: ICM 32 Function module / top cover Table II

Description	Code Number
ICM 32-A	027H3180[1]
ICM 32-B	027H3181[1]

[1] Including gasket and O-rings

Figure 30: Actuator ICAD 600B

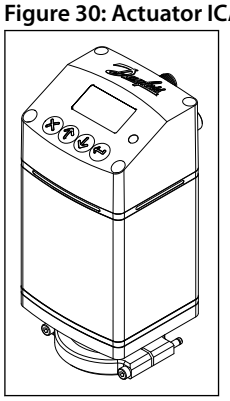

Table 44: Actuator ICAD 600B Table III

Type	Code no.
ICAD 600B with display, Bluetooth, RS485	027H0485
ICAD 600B with display, Bluetooth, Ethernet	027H0486
ICAD 600B, without display, Bluetooth, RS485	027H0488
ICAD 600B, without display,Bluetooth, Ethernet	027H0489

NOTE:
Cables should be ordered separately. Please see ICAD B data sheet Motor actuator for ICM/ICM-TS motorized valves and CVE pilot valve

Ordering complete factory assembled valve without actuator

Figure 31: Valve without actuator

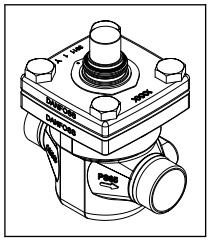

Table 45: Body, function module / top cover Table A

	Available connections							
	32 D (1 ¼ in.)	40 D (1 ½ in.)	42 SA (1 ⅝ in.)	42 SD (1 ⅝ in.)	35 SD (1 ⅜ in. SA)	32 A (1 ¼ in.)	32 SOC (1 ¼ in.)	40 A (1 ½ in.)
ICM 32-A	027H3000	027H3012	027H3008	[2]	027H3006	027H3002	027H3004	[2]
ICM 32-B	027H3001	[2]	[2]	[2]	027H3007	027H3003	027H3005	[2]

[2] Select from parts programme

ICM 40 / ICAD 1200B

Table 46: Example (select from table I, II and III)

Valve body A 40 (1½ in.) 027H4121 Table 47		Top cover/function module ICM 40-A 027H4180 Table 48		Actuator 027H0490 Table 49		
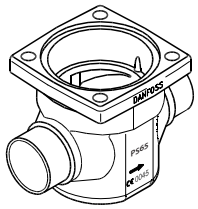	+	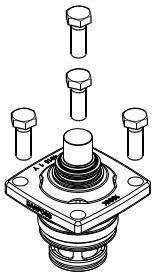	+	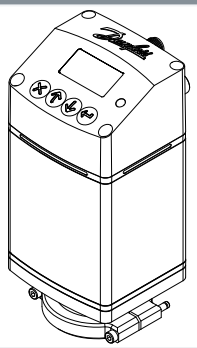	=	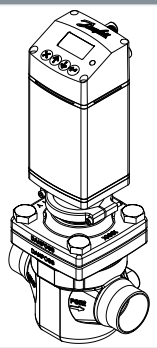

Figure 32: ICV 40 valve body

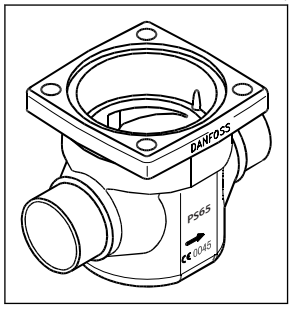

Table 47: ICV 40 valve body w/different connections Table I

40 D (1 ½ in.)	**50 D (2 in.)**	**42 SA (1 ⅝ in.)**	**42 SD (1 ⅝ in.)**
027H4120	027H4126	027H4124	027H4123
40 A (1 ½ in.)	**40 SOC (1 ½ in.)**	**50 A (2 in.)**	
027H4121	027H4122	027H4127	

NOTE:

D = Butt-weld DIN ; A = Butt-weld ANSI ; J = Butt-weld JIS ; SOC = Socket weld ANSI ; SD = Solder DIN ; SA = Solder ANSI ; FPT = Female Pipe Thread

Figure 33: ICM 40

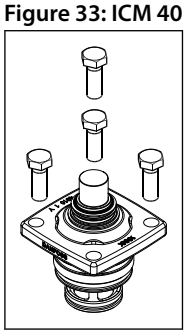

Table 48: ICM 40 Function module / top cover Table II

Description	Code Number
ICM 40-A	027H4180[1]
ICM 40-B	027H4181

[1] Including gasket and O-rings

Figure 34: Actuator ICAD 1200B

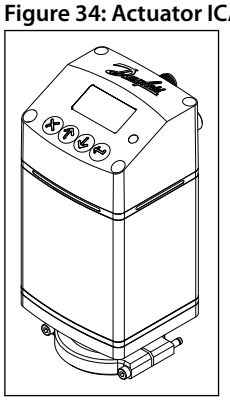

Table 49: Actuator ICAD 1200B Table III

Type	Code no.
ICAD 1200B, with display, Bluetooth, RS485	027H0490
ICAD 1200B, with display, Bluetooth, Ethernet	027H0491
ICAD 1200B, without display, Bluetooth, RS485	027H0493
ICAD 1200B, without display, Bluetooth, Ethernet	027H0494

NOTE:
Cables should be ordered separately. Please see ICAD B data sheet Motor actuator for ICM/ICM-TS motorized valves and CVE pilot valve

Ordering complete factory assembled valve without actuator

Figure 35: Valve without actuator

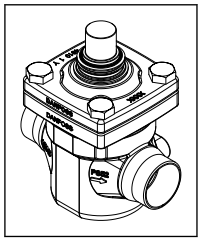

Table 50: Body, function module/top cover Table A

Available connections							
Type	**40 D (1 ½ in.)**	**50 D (2 in.)**	**42 SA (1 ⅝ in.)**	**42 SD (1 ⅝ in.)**	**40 A (1 ½ in.)**	**40 SOC (1 ½ in.)**	**50 A (2 in.)**
ICM 40-A	027H4000	027H4010	027H4006	027H4008	027H4002	027H4004	[2]
ICM 40-B	027H4001	[2]	027H4007	027H4009	027H4003	027H4005	[2]

[2] Select from parts programme

ICM 50 / ICAD 1200B

Table 51: Example (select from table I, II and III)

Valve body 65 D (1½ in.) 027H5124 Table 52		Top cover/function module ICM 50-A 027H4180 Table 53		Actuator 027H0490 Table 54		
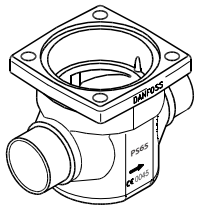	+	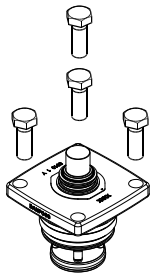	+	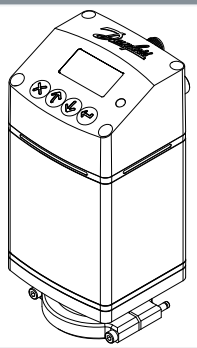	=	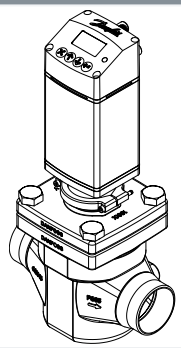

Figure 36: ICV 50 valve body

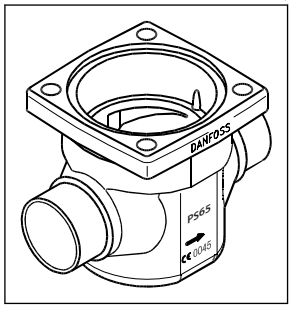

Table 52: ICV 50 valve body w/different connections Table I

50 D (2 in.)	65 D (2 ½ in.)	54 SD (2 ⅛ in. SA)	50 A (2 in.)
027H5120	027H5124	027H5123	027H5121
50 SOC (2 in.)	**65 A (2 ½ in.)**		
027H5122	027H5125		

Figure 37: ICM 50

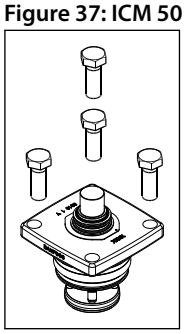

Table 53: ICM 50 Function module / top cover Table II

Description	Code Number
ICM 50-A	027H5180[1]
ICM 50-B	027H5181[1]

[1] Including gasket and O-rings

Figure 38: Actuator ICAD 1200B

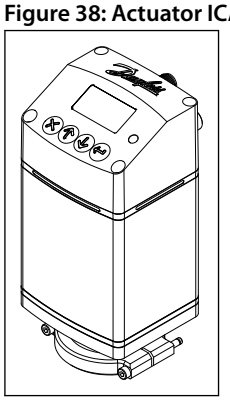

Table 54: Actuator ICAD 1200B Table III

Type	Code no.
ICAD 1200B, with display, Bluetooth, RS485	027H0490
ICAD 1200B, with display, Bluetooth, Ethernet	027H0491
ICAD 1200B, without display, Bluetooth, RS485	027H0493
ICAD 1200B, without display, Bluetooth, Ethernet	027H0494

NOTE:
Cables should be ordered separately. Please see ICAD B data sheet Motor actuator for ICM/ICM-TS motorized valves and CVE pilot valve

Ordering complete factory assembled valve without actuator

Figure 39: Valve without actuator

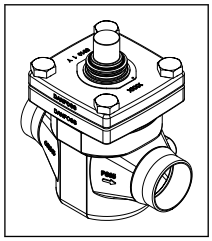

Table 55: Body, function module / top cover Table A

Available connections						
Type	**50 D (2 in.)**	**65 D (2 ½ in.)**	**54 SD (2 ⅛ in. SA)**	**50 A (2 in.)**	**50 SOC (2 in.)**	**65 A (2 ½ in.)**
ICM 50-A	027H5000	027H5008	027H5006	027H5002	027H5004	[2]
ICM 50-B	027H5001	[2]	027H5007	027H5003	027H5005	[2]

[2] Select from parts programme

ICM 65 / ICAD 1200B

Table 56: Example (select from table I, II and III)

Valve body 65 J (2½ in.) 027H6122 Table 57		Top cover/function module ICM 65-B 027H6181 Table 58		Actuator 027H0490 Table 59		
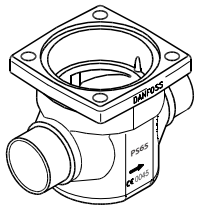	+	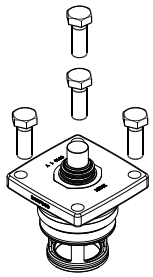	+	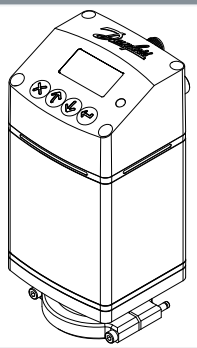	=	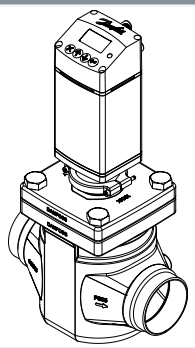

Figure 40: ICV 65 valve body

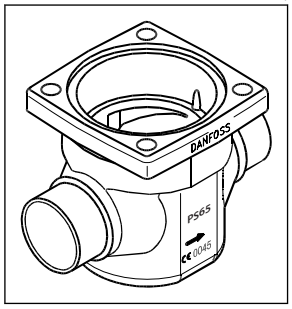

Table 57: ICV 65 valve body w/different connections Table I

65 D (2 ½ in.)	**65 A (2 ½ in.)**	**65 J (2 ½ in.)**	**80 D (3 in.)**
027H6120	027H6121	027H6122	027H6126
80 A (3 in.)	**67 SA (2 ⅝ in.)**	**76 SD (3 in.)**	**65 SOC (2 ½ in.)**
027H6127	027H6125	027H6124	027H6123

NOTE:

D = Butt-weld DIN ; A = Butt-weld ANSI ; J = Butt-weld JIS ; SOC = Socket weld ANSI ; SD = Solder DIN ; SA = Solder ANSI ; FPT = Female Pipe Thread

Figure 41: ICM 65

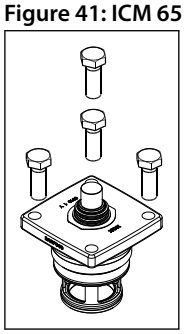

Table 58: ICM 65 Function module / top cover Table II

Description	Code Number
ICM 65-A	027H6180[1]
ICM 65-B	027H6181[1]

[1] Including gasket and O-rings

Figure 42: Actuator ICAD 1200B

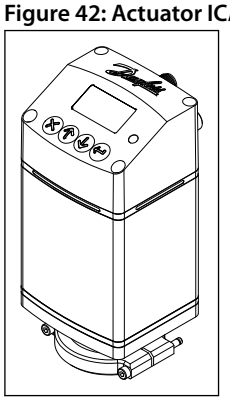

Table 59: Actuator ICAD 1200B Table III

Type	Code no.
ICAD 1200B, with display, Bluetooth, RS485	027H0490
ICAD 1200B, with display, Bluetooth, Ethernet	027H0491
ICAD 1200B, without display, Bluetooth, RS485	027H0493
ICAD 1200B, without display, Bluetooth, Ethernet	027H0494

NOTE:
Cables should be ordered separately. Please see ICAD B data sheet Motor actuator for ICM/ICM-TS motorized valves and CVE pilot valve

Ordering complete factory assembled valve without actuator

Figure 43: Valve without actuator

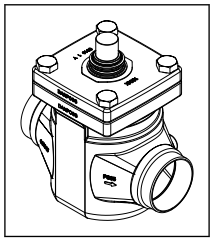

Table 60: Body, function module / top cover Table A

	Available connections							
Type	**65 D (2 ½ in.)**	**65 A (2 ½ in.)**	**65 J (2 ½ in.)**	**80 D (3 in.)**	**80 A (3 in.)**	**67 SA (2 ⅝ in.)**	**76 SD (3 in.)**	**65 SOC (2 ½ in.)**
ICM 65-A	027H6010	027H6012	[2]	[2]	[2]	[2]	[2]	[2]
ICM 65-B	027H6001	027H6003	[2]	[2]	[2]	027H6007	027H6009	027H6005

[2] Select from parts programme

ICM 100

Complete factory assembled valve without actuator

Figure 44: Body, function module / top cover

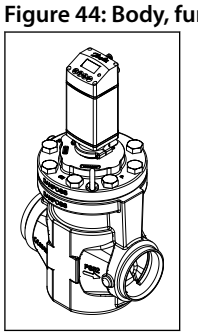

Figure 45: ICM 100 Valve body

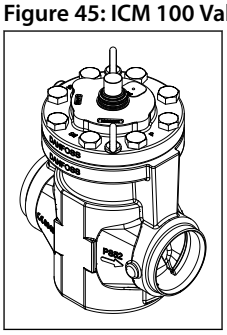

Table 61: Body, function module / top cover

Available connections		
Type	100 D (4 in.)	100 A (4 in.)
ICM 100	027H7130	027H7131

Figure 46: Actuator ICAD 1200B

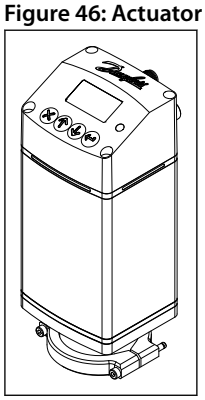

Table 62: Actuator ICAD 1200B

Type	Code no.
ICAD 1200B, with display, Bluetooth, RS485	027H0490
ICAD 1200B, with display, Bluetooth, Ethernet	027H0491
ICAD 1200B, without display, Bluetooth, RS485	027H0493
ICAD 1200B, without display, Bluetooth, Ethernet	027H0494

NOTE:
Cables should be ordered separately. Please see ICAD B data sheet Motor actuator for ICM/ICM-TS motorized valves and CVE pilot valve

ICM 125

Complete factory assembled valve without actuator

Figure 47: Body, function module / top cover

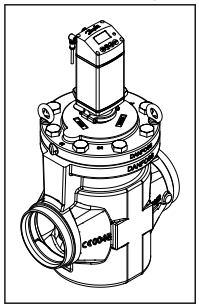

Figure 48: ICM 100 Valve body

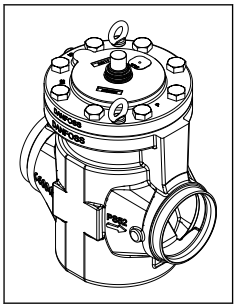

Table 63: Body, function module / top cover

Available connections		
Type	125 D (5 in.)	125 A (5 in.)
ICM 125	027H7150	027H7151

Figure 49: Actuator ICAD 1200B

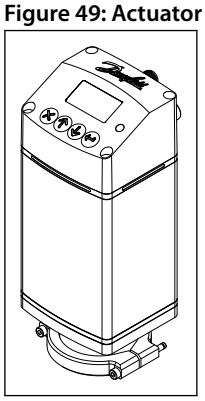

Table 64: Actuator ICAD 1200B

Type	Code no.
ICAD 1200B, with display, Bluetooth, RS485	027H0490
ICAD 1200B, with display, Bluetooth, Ethernet	027H0491
ICAD 1200B, without display, Bluetooth, RS485	027H0493
ICAD 1200B, without display, Bluetooth, Ethernet	027H0494

NOTE:
Cables should be ordered separately. Please see ICAD B data sheet Motor actuator for ICM/ICM-TS motorized valves and CVE pilot valve

ICM 150

Complete factory assembled valve without actuator

Figure 50: Body, function module / top cover

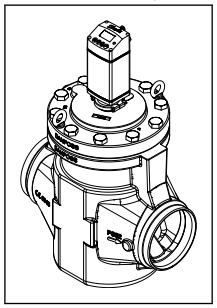

Figure 51: ICM 150 Valve body

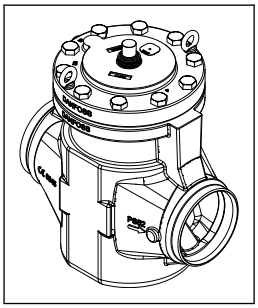

Table 65: Body, function module / top cover

Available connections		
Type	150 D (6 in.)	150 A (6 in.)
ICM 150	027H7170	027H7171

Figure 52: Actuator ICAD 1200B

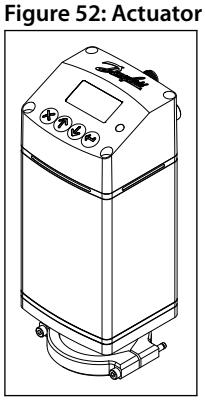

Table 66: Actuator ICAD 1200B

Type	Code no.
ICAD 1200B, with display, Bluetooth, RS485	027H0490
ICAD 1200B, with display, Bluetooth, Ethernet	027H0491
ICAD 1200B, without display, Bluetooth, RS485	027H0493
ICAD 1200B, without display, Bluetooth, Ethernet	027H0494

NOTE:
Cables should be ordered separately. Please see ICAD B data sheet Motor actuator for ICM/ICM-TS motorized valves and CVE pilot valve

Accessories

ICV PM flanged valve housings

Figure 53: ICV PM flanged valve housings

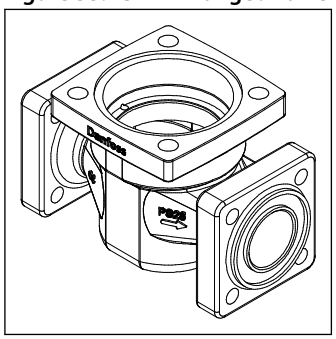

ICV PM flanged valve housings
ICV PM flanged valve housings can replace the PM valves on already installed refrigeration systems.

Pressure range
The ICV PM valve housing is designed for a max. working pressure of 28 bar g / 406 psig and therefore a suitable replacement for PM valves in the service market. They also offer the same drop-in dimensions as the PM valves.

Table 67: ICV PM flanged valve housings

Description	Code no.
ICV 25 PM Valve housing	027H2119[1]
ICV 32 PM Valve housing	027H3129[1]
ICV 40 PM Valve housing	027H4128[1]
ICV 50 PM Valve housing	027H5127[2]
ICV 65 PM Valve housing	027H6128[2]

[1] Includes ICV PM valve housing, flange gaskets and flange bolts
[2] Includes ICV PM valve housing, flange gaskets, flange bolts and flange nuts

Figure 54: ICV PM flanged valve housings assembly

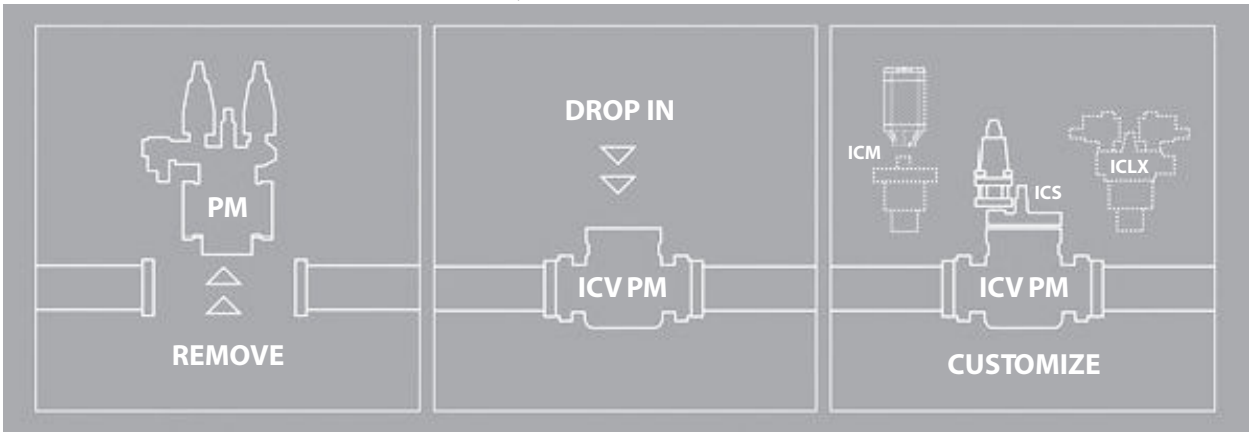

NOTE:
Function modules and top covers must be ordered separately (see the section Page 23).

ICV (H)A4A flanged valve housings

Figure 55: ICV (H)A4A flanged valve housings

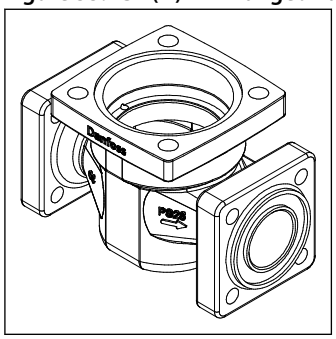

ICV (H)A4A flanged valve housings

ICV (H)A4A flanged valve housings can replace the (H)A4A valves on already installed refrigeration systems.

The ICV (H)A4A flanged valve housing provides an upgrade of the old motor valve types HMMR and HMMV to ICM motorized valve as a drop-in solution.

Pressure range

The ICV (H)A4A valve housing is designed for a max. working pressure of 28 bar g / 406 psig and therefore a suitable replacement for (H)A4A valves in the service market. They also offer the same drop-in dimensions as the (H)A4A valves.

Table 68: ICV (H)A4A flanged valve housings

Description	Code no.
ICV 25 (H)A4A Valve housing	027H2304[1]
ICV 32 A4A Valve housing	027H3130[1]
ICV 32 HA4A Valve housing	027H3131[1]
ICV 40 (H)A4A Valve housing	027H4129[1]
ICV 50 (H)A4A Valve housing	027H5128[2]
ICV 65 (H)A4A Valve housing	027H6129[2]

[1] Includes ICV PM valve housing, flange gaskets and flange bolts
[2] Includes ICV PM valve housing, flange gaskets, flange bolts and flange nuts

Figure 56: ICV (H)A4A flanged valve housings assembly

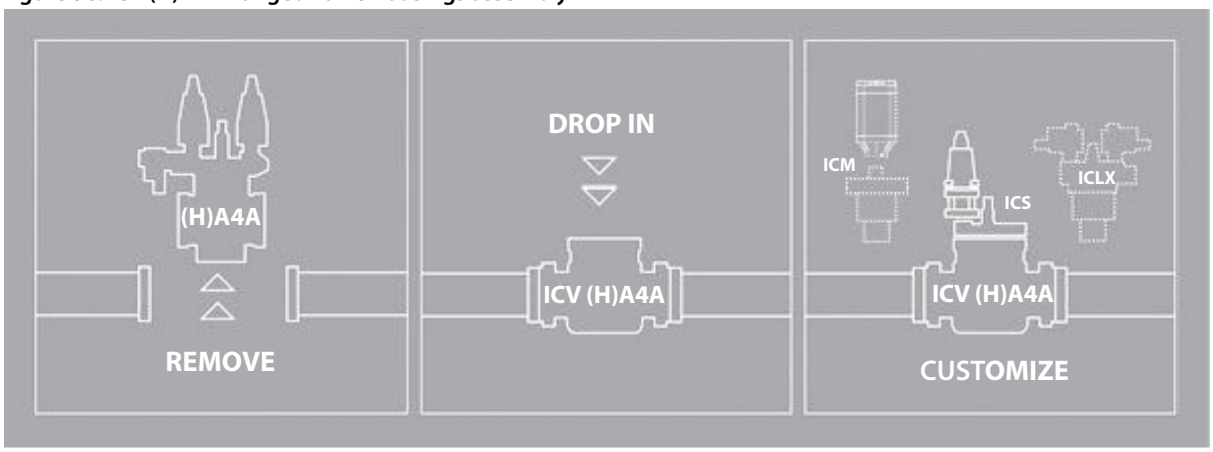

NOTE:
Function modules and top covers must be ordered separately (see the section Page 23).

Accessories

Figure 57: Repair kit for ICM 20

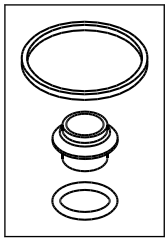

Table 69: Repair kit for ICM 20

Description	Code Number
Repair kit ICM 20-A / ICM 20-A-33 (Metal with plastic seat) ICM 20-B / ICM 20-C (Plastic seat)	027H1190

Figure 58: Inspection kit for ICM 25-32

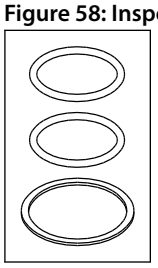

Table 70: Inspection kits for ICM 25-32

Description	Code Number
ICM 25 Inspection kit	027H2218
ICM 32 Inspection kit	027H3016

Figure 59: Inspection kit for ICM 40-50-65

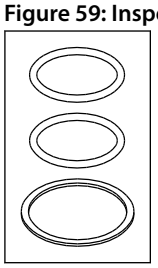

Table 71: Inspection kits for ICM 40-50-65

Description	Code Number
ICM 40 Inspection kit	027H4014
ICM 50 Inspection kit	027H5014
ICM 65 Inspection kit	027H6016

Figure 60: Top covers for ICM 100–125–150

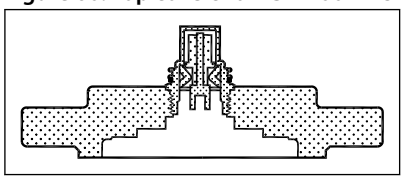

Table 72: Accessories ICM 100–125–150

Top covers	
Size	**Code number**
ICM 100	027H7133
ICM 125	027H7153
ICM 150	027H7173

NOTE:
Consist of: Top cover complete with magnet coupling and gasket

Figure 61: Connectors

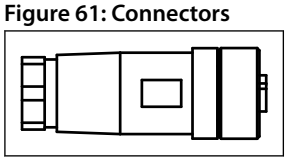

Table 73: Accessories

Connectors for ICAD	
Connector type	**Code Number**
Two Female Connectors with screw terminals: • connector for power • connector for control signals	027H0430

Figure 62: ICAD-UPS

Table 74: Accessories

Description	Code Number
ICAD-UPS	027H0388

Figure 63: Multi-function tool

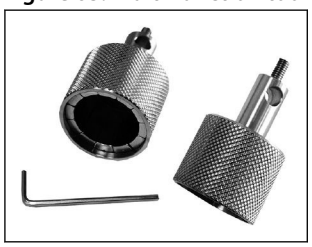

Table 75: Accessories

Description	Description	Code Number
ICM 20-32	Multi-function tool	027H0180
ICM 40-150	Multi-function tool	027H0181

Figure 64: Cable

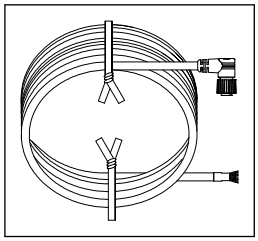

NOTE:
Cables should be ordered separately.

Table 76: ICAD B cable set with 3x cables (power supply, control signal and data communication)

Length	Code no.
ICAD B Cable set 1,5m (3x cables)	027H0464
ICAD B Cable set 3m (3x cables)	027H0465
ICAD B Cable set 10m (3x cables)	027H0466
ICAD B Cable set 15m (3x cables)	027H0467

Table 77: ICAD A and ICAD B cable set with 2x cables (power supply and control signal)

Length	Code no.
ICAD A and ICAD B Cable set 1,5m (2x cables)	027H0426
ICAD A and ICAD B Cable set 3,0m (2x cables)	027H0438
ICAD A and ICAD B Cable set 10m (2x cables)	027H0427
ICAD A and ICAD B Cable set 15m (2x cables)	027H0435

Table 78: ICAD service kits

Type	Code no.
Service kit ICAD 600B (10 pcs of o-rings for magnetic coupling)	027H0428
Service kit ICAD 1200B (10 pcs of o-rings for magnetic coupling)	027H0429

Figure 65: ICAD Protection Cap

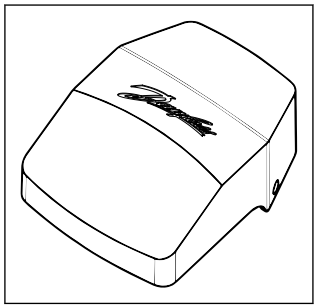

Table 79: ICAD Protection Cap

Type	Code no.
ICAD-B Protective cover	027H0468

NOTE:
Please observe, when used in CO_2, that the o-rings on the ICM module can swell (grow). At service it is recommend that new o-rings are installed before the ICM functions module again is installed in the ICV valve body.

General operation

ICAD actuators are equipped with multiple interfaces (onboard display, Bluethooth mobile app and data communication) from which it is possible to monitor and change the setting of parameters to adapt the actuator and the corresponding ICM valves to the actual refrigeration application.

ICAD light guide

In addition to the onboard display, ICAD B is equiped with an status light guide visible from different angles. The light guide provides a continues status of ICAD B operation in real time.

Figure 66: ICAD light guide

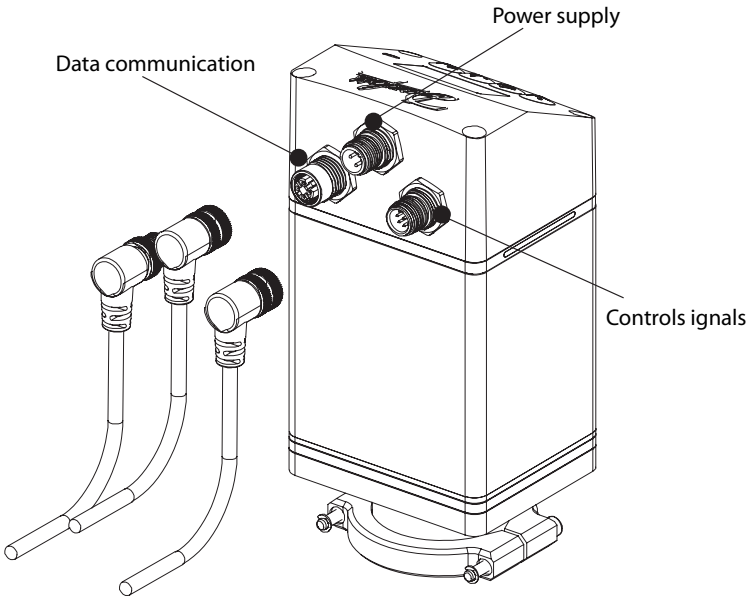

Light guide

Flashing red	Critical alarm - stopped operating
Steady red	Severe alarm - danger of stopping operating
Flashing blue	ICAD is connected via Bluetooth
Steady yellow	Warning
Flashing green	OK

Status bar

The main screen layout and navigation is as described below. ICAD will start up in warning mode as the ICM configuration needs to be defined to start operation. Follow the steps on next page to set this up correctly.

1. To access the ICAD actuator menu, press ENTER button

Figure 67: STATUS BAR

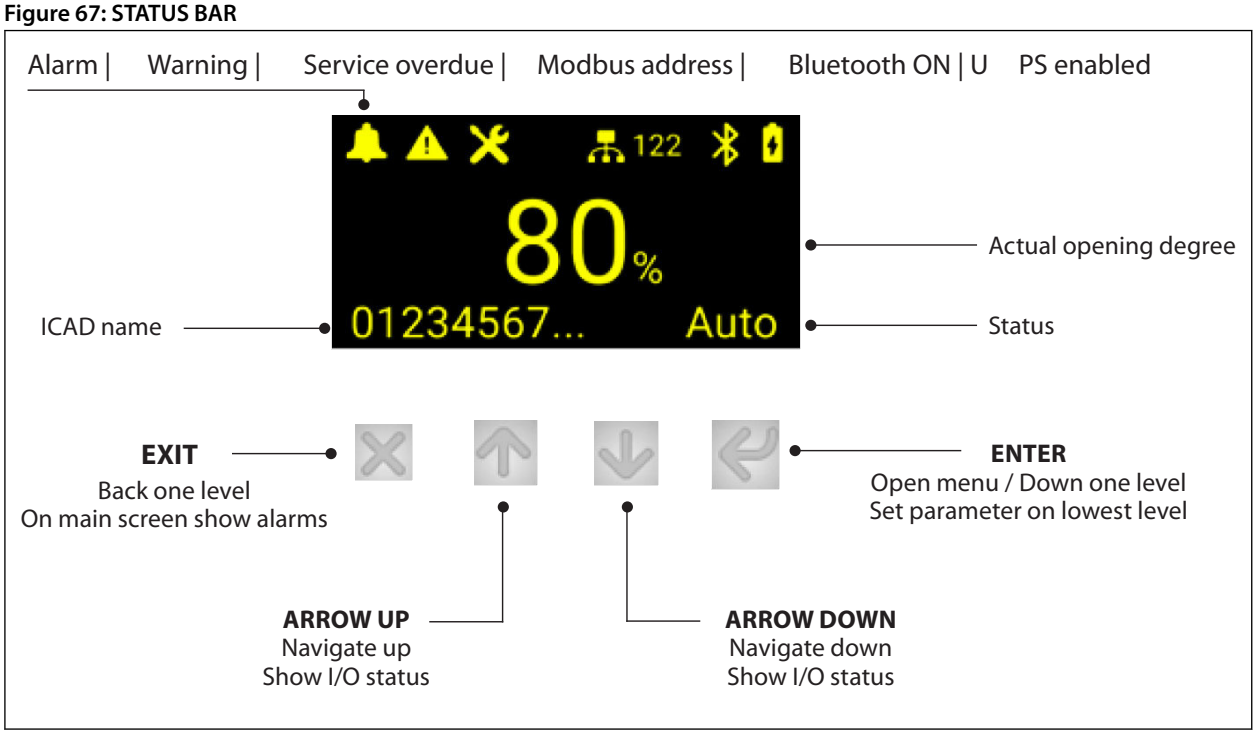

2. Once you are in the menu, use the UP and DOWN arrows to move through the list of parameters
3. To display and/or change the value of the parameter, press ENTER button to view the current settings
   3.1. To change the value of a parameter, use the up or down arrow to establish the new value for that parameter
   3.2. Once the new value for the parameter has been selected, press ENTER button to save the change and return to the menu
   3.3. Repeat this procedure for all parameters
   3.4. Exit from the parameter list by pressing EXIT button or simply wait for the ICAD to return to the main display (approx. 20 seconds)

ICAD Actuator configuration

Parameter List

Service/Control Parameters

Label ID	Parameter name	Description and selection options	Min.	Max.	Factory setting	Modbus address	Alternative Modbus address	Size in bytes	Password level to Read - Write	Read only (RO) / Read Write (RW) / Write (W)	Persistent Yes/No	Modbus function
ID1	Main switch	**ICAD operating mode** **0: Auto:** Input signal type (ID3) controls valve position **1: Manual:** user manually sets the valve position to be maintained **2: Config:** ICAD continues to operate as before. In config mode parameters can be changed but are not applied until setting main switch back to auto or manual	0	2	0	3000	3300	1	1 - 2	RW	Yes	3 & 6, 16
ID2	Operation mode	**Define ICAD mode** **0: Modulating:** Valve positioning according to Analog Input (see ID3) **1: ON/OFF:** Operating ICM valve like an ON/OFF valve controlled via Digital Input (see ID23 for definition of fully close/fully open) **2: 3-point control:** Increase/ Decrease Opening Degree by Digital Input.	0	2	0	3001	3301	1	1 - 2	RW	Yes	3 & 6, 16
ID3	Input signal type	**Type of AI signal from external controller** Only active when Operation mode (ID2) is set to Modulating. If the input signal received does not match this setting an Input signal out of bounds (A3) alarm will show. **0:** 0-20mA; **1:** 4-20mA; **2:** 0-10V; **3:** 2-10V; **4:** modbus; **5:** non config	0	5	5	3002	3302	1	1 - 2	RW	Yes	3 & 6, 16
ID4	Requested Opening Degree (setpoint)	**Set the desired opening degree** Only when main switch is set to manual (ID1=1) **0…100%** (min step – 1%)	0	100	0	3003	3303	1	1 - 1	RW	No	3 & 6, 16
ID203	Requested Opening Degree (setpoint)	**The opening degree requested through Modbus** Only active when Main switch is set to auto (ID1=0) and input signal is set to Modbus (ID3=4). 0…10000 points, where 100 = 1% (i.e. 5021 = 50.21%; 10000 = 100.00%)	0	10000	0	3004	3304	2	1 - 1	RW	No	3 & 6, 16
ID24	Service passcode (Level 2)	**Change password for level 2 acess.** Level 2 will give acess to read/write parameters of level 2. See Column "Password level to Read - Write" and "Read only / Read Write"	0	99999999	12131400	3005 … 3006		4	2	W	Yes	16

Service/Advanced Control Parameters

Label ID	Parameter name	Description and selection options	Min.	Max.	Factory setting	Modbus address	Alternative Modbus address	Size in bytes	Password level to Read - Write	Read only (RO) / Read Write (RW) / Write (W)	Persistent Yes/No	Modbus function
ID5	Speed positive, 3-point	**Opening speed** Only active when Operation mode (ID2) is set to 3-point. Percentage of full speed. **1...100%** (min step – 1%)	1	100	10	3011		1	2 - 2	RW	Yes	3 & 6, 16
ID75	Speed negative, 3-point	**Closing speed** Only active when Operation mode (ID2) is set to 3-point. Percentage of full speed. **1...100%** (min step – 1%)	1	100	10	3012		1	2 - 2	RW	Yes	3 & 6, 16
ID6	Speed positive, on/off	**Opening speed** Only active when Operation mode (ID2) is set to ON/OFF. Percentage of full speed **1...100%** (min step – 1%)	1	100	100 - ICAD 600; 50 - ICAD 1200	3013		1	2 - 2	RW	Yes	3 & 6, 16
ID76	Speed negative, on/off	**Closing speed** Only active when Operation mode (ID2) is set to ON/OFF. Percentage of full speed **1...100%** (min step – 1%)	1	100	100 - ICAD 600; 50 - ICAD 1200	3014		1	2 - 2	RW	Yes	3 & 6, 16
ID7	Speed, modulating	**Speed while modulating** Only active when Operation mode (ID2) is set to Modulating. Percentage of full speed **1...100%** (min step – 1%) For CVE valve max value = 50%	1	100	100 - ICAD 600; 50 - ICAD 1200	3015		1	2 - 2	RW	Yes	3 & 6, 16
ID9	Automatic valve detection	**Valve size detection for ICAD** **0: No:** Not active **1: Yes:** Valve detection will be started. The parameter will automatically be set back to 'no' and ID8 valve configuration parameter will be set to the detected valve when detection has finished.	0	1	0	3009	3305	1	1 - 2	RW	Yes	3 & 6, 16
ID8	Valve configuration	**Valve size detection action for ICAD** **Note:** The allowed value of the parameter varies depends on the ICAD model parameter (ID73) **12**: ICADTS ICMTS 50/80; **11**: ICADTS ICMTS20; **10**: Pilot Valve CVE; **9**: ICAD1200B ICM150; **8**: ICAD1200B ICM125; **7**: ICAD1200B ICM100; **6**: ICAD1200B ICM65; **5**: ICAD1200B ICM50; **4**: ICAD1200B ICM40; **3**: ICAD600B ICM32; **2**: ICAD600B ICM25; **1**: ICAD600B ICM20; **0**: not configured **No valve selected**. Alarm A1 will become active	0	12	0	3010	3306	1	1 - 2	RW	Yes	3 & 6, 16
ID23	DI function	Defines what happens when DI is ON (DI terminals are shorted) Only active when operation mode (ID2) is set to ON/OFF. **1: Open valve:** DI = ON = > Close ICM valve **0: Close valve:** DI = ON = > Open ICM valve	0	1	0	3025	3310	1	1 - 2	RW	Yes	3 & 6, 16

Label ID	Parameter name	Description and selection options	Min.	Max.	Factory setting	Modbus address	Alternative Modbus address	Size in bytes	Password level to Read - Write	Read only (RO) / Read Write (RW) / Write (W)	Persistent Yes/No	Modbus function
ID13	(Inverse) operation	When Operation mode (ID2) is set to modulating. **1: On:** Increasing Analog Input signal => Decreasing opening degree **0: Off:** Increasing Analog Input signal => Increasing opening degree When Operation mode (ID2) is set to 3-point. **1: On:** DI1 = ON, DI2 = OFF => Decreasing opening degree DI1 = OFF, DI2 = ON => Increasing opening degree DI1 = DI2 = OFF => Maintain current position DI1 = DI2 = ON => Maintain current position **0: Off:** DI1 = ON, DI2= OFF => Increasing opening degree DI1 = OFF, DI2 = ON => Decreasing opening degree DI1 = DI2 = OFF => Maintain current position DI1 = DI2 = ON => Maintain current position **Note: Not active when Operation mode is set to ON/OFF. For ON/OFF control refer to DI funtion (ID23)**	0	1	0	3016		1	2 - 2	RW	Yes	3 & 6, 16
ID157	2 step ON/OFF	Active if operation mode (ID2) is set to on/off **1: Yes:** On/off mode with 2 step opening and/or 2 step closing. Activates parameters ID158...ID162 **0: No:** On/off mode with 1 step opening or closing, without additional steps while driving	0	1	0	3270	3312	1	1 - 2	RW	Yes	3 & 6, 16
ID158	2 step mode	**2 step mode** **2:** Open & close; **1:** Close; **0:** Open	0	2	2	3271	3313	1	1 - 2	RW	Yes	3 & 6, 16
ID159	Open step	Only active if 2 step mode (ID158) is set to 0 (Open) or 2 (Open & close) The valve will stop in this position before moving to the fully open (100%) position 0…75% (min step – 1%)	0	75	20	3272	3314	1	1 - 2	RW	Yes	3 & 6, 16
ID160	Close step	Only active if 2 step mode (ID158) is set to 1 (Close) or 2 (Open & close) The valve will stop in this position before moving to the fully closed (0%) position **0…75%** (min step – 1%)	0	75	20	3273	3315	1	1 - 2	RW	Yes	3 & 6, 16
ID161	1st step delay (Open)	Only active if 2 step mode (ID158) is set to 0 (Open) or 2 (Open & close) 5…600 seconds (min step – 1)	5	600	30	3274	3316	2	1 - 2	RW	Yes	3 & 6, 16
ID162	1st step delay (Close)	Only active if 2 step mode (ID158) is set to 1 (Close) or 2 (Open & close) 5…600 seconds (min step – 1)	5	600	30	3275	3317	2	1 - 2	RW	Yes	3 & 6, 16

Label ID	Parameter name	Description and selection options	Min.	Max.	Factory setting	Modbus address	Alternative Modbus address	Size in bytes	Password level to Read - Write	Read only (RO) / Read Write (RW) / Write (W)	Persistent Yes/No	Modbus function
ID16	Forced closing	**Enable/Disable forced closing** Not active when CVE valve is chosen (ID8) **1: On:** When valve Opening Degree < 3% it will be forced to close regardless of requested ICM valve Opening Degree **0: Off:** When valve Opening Degree < 3% no forced closing will take place. **Disabling forced closing is not recommended as it can lead to leaking valves.**	0	1	1	3017		1	2 - 2	RW	Yes	3 & 6, 16
ID17	Automatic calibration	ICAD indicates in display when calibration is taking place. Calibration is also performed after the selection of a valve (ID8). It will automatically set back to 0 after calibration is performed. **2: Extended:** Calibration from fully closed to fully open **1: Normal:** Forced calibration to fully closed **0: None:** No calibration performed	0	2	0	3018		1	2 - 2	RW	No	3 & 6, 16
ID151	Startup calibration	**Selection of startup calibration type** **1: Extended:** Calibration from fully closed to fully open **0: Normal:** Forced calibration to fully closed	0	1	0	3027	3311	2	1 - 2	RW	Yes	3 & 6, 16
ID18	AO Signal output	**Type of A0 signal for valve position.** This selection must match the output expected to read this externally. AO signal calculation is based on the encoder. **2: 4-20 mA;** **1: 0-20 mA;** **0: no signal**	0	2	2	3020	3307	1	1 - 2	RW	Yes	3 & 6, 16
ID21	UPS supply	**Define if an Uninterruptible Power Supply (UPS) is applied to the ICAD.** This enables A4 alarms (Low voltage of UPS supply). **1: Yes:** UPS is attached **0: No:** Nothing attached	0	1	0	3023	3308	1	1 - 2	RW	Yes	3 & 6, 16
ID22	UPS setting	**Defines when the health indication of a UPS can be considered as good.** Only active if UPS supply (ID21) is set to yes. This enables the UPS signal of health alarm (A14) and shows the health state of the UPS for ICAD. **2: DI Low:** good health; **1: DI High:** good health; **0: Off:** no UPS health detection	0	2	0	3024	3309	1	1 - 2	RW	Yes	3 & 6, 16

Service/Alarm Configuration Parameters

Label ID	Parameter name	Description and selection options	Min.	Max.	Factory setting	Modbus address	Alternative Modbus address	Size in bytes	Password level to Read - Write	Read only (RO) / Read Write (RW) / Write (W)	Persistent Yes/No	Modbus function
ID19	AO Alarm signal output	**Defines if analog output should signal active alarms** Setting this to a value means that the output will be set to this value whenever ICAD is in alarm mode. Only active when AO signal (ID18) is set to 4-20mA. **2: 22mA:** Analog output will be set to 22 mA in case of active alarms(s) **1: 3.6mA:** Analog output will be set to 3.6 mA in case of active alarm(s) **0: Off:** Analog output will continue to signal the valve position **Note: When setting this to anything other than Off, the analog output will not signal valve position whenever ICAD is in alarm mode.**	0	2	0	3021	3318	1	1 - 2	RW	Yes	3 & 6, 16
ID20	Emergency state	**Set the requested valve position for safe state** Safe state occurs for A2, A3, A5, A8, A10, and can be a result of the boosting process during A9. **3:** emergency opening degree (set position to ID27) **2:** maintain position; **1:** open valve; **0:** close valve;	0	3	0	3022	3319	1	1 - 2	RW	Yes	3 & 6, 16
ID27	Emergency OD	**The opening degree to use in safe state** Only active when Emergency state (ID20) is set to emergency opening degree (ID27) **0…100%** (min step – 1%)	0	100	50	3026	3320	1	1 - 2	RW	Yes	3 & 6, 16
ID229	Reset alarm A9	**Manual reset of active A9 alarm** Only active If boost action (ID28) is set to once, and reset A9 alarms (ID31) is set to manual or auto. **1: Yes:** Active A9 alarm will be reset, safe state will be cancelled and ICAD will go to the requested OD. This parameter will automatically be set back to 'No' once the alarm is reset. **0: No:** Active alarms are not reset. (Default state)	0	1	0	3035	3321	1	1 - 1	RW	No	3 & 6, 16

Service/Boost Function Parameters

Label ID	Parameter name	Description and selection options	Min.	Max.	Factory setting	Modbus address	Alternative Modbus address	Size in bytes	Password level to Read - Write	Read only (RO) / Read Write (RW) / Write (W)	Persistent Yes/No	Modbus function
ID28	Boost action	**Defines how to manage when the opening degree is outside of the threshold of the max offset allowed (ID30).** **2: Once:** If boosting for 15 seconds did not allow to get back into position, then A9 alarm is raised and ICAD goes to Safe state (ID20) (if feasible), no calibration. **1: Cycling**: Keep boosting 15 seconds, break for the time specified as boost delay (ID29), then raise A9 alarm. Cycle continues position has been regained. **Note: It is not recommended to change this setting from default.**	1	2	1	3030		1	2 - 2	RW	Yes	3 & 6, 16
ID29	Boost delay	**Minutes after boost before next boost and raise of A9 alarm.** 1…30 minutes (min step – 1) **Note: It is not recommended to change this setting from default.**	1	30	1	3031		1	2 - 2	RW	Yes	3 & 6, 16
ID30	Max offset	**Max offset value between encoder position and step counter position before boosting starts.** 3…15% (min step – 1%)	3	15	3	3032		1	2 - 2	RW	Yes	3 & 6, 16
ID31	Reset A9 Alarms	**Define how to Reset/ Suppress A9 alarm and DO Common Alarm ON.** **2: Suppress:** Ignore detection of the stall. No alarm is raised and DO Common Alarm output remains OFF. **1: Auto**: Reset when it is within max offset (ID30) limit again and reset delay time (ID32) has elapsed **0: Manually:** User resets alarm using the reset alarm action. **Note: It is not recommended to change this setting from default.**	0	2	1	3033		1	2 - 2	RW	Yes	3 & 6, 16
ID32	Reset A9 Alarm delay	**Define the reset delay for A9 alarms.** Only active when reset A9 alarm (ID31) is set to auto. 1…20 minutes (min step – 1) **Note: It is not recommended to change this setting from default, and this value should always be longer than the boost delay (ID29)**	1	20	5	3034		1	2 - 2	RW	Yes	3 & 6, 16

Service/System Parameters

Label ID	Parameter name	Description and selection options	Min.	Max.	Factory setting	Modbus address	Alternative Modbus address	Size in bytes	Password level to Read - Write	Read only (RO) / Read Write (RW) / Write (W)	Persistent Yes/No	Modbus function
ID49	Service reminder	Use a service reminder for when the valve should be serviced in order to maintain operation of the system. ICAD will initiate a warning when Time to next service (ID50) reaches 0. Valves should be checked once a year. This is enabled by default. **1: Turn On** Service reminder **0: Turn Off** Service reminder	0	1	0	3062	3349	1	1 - 2	RW	Yes	3 & 6, 16
ID51	Reset service interval	Reset the current service interval. This is required when ICAD has warning 'Service interval overdue (A15)' active, and the valve has been physically examined by a technician. **1: Yes**: Time overdue will be reset. Time to next service will be set to Service interval. The parameter will automatically be set back to 'no'. **0: No:** Not active	0	1	0	3066		1	2 - 2	RW	No	3 & 6, 16
ID234	Service interval	Indicates the service interval until the valve should be checked. This is by default once a year. 1…999 (in days)	1	999	365	3065	3352	2	1 - 2	RW	Yes	3 & 6, 16
ID26	Clear event log	**Clear event log** **1: Yes:** All event log entries will be hidden. The parameter will automatically be set back to 'no' when hide has finished **0: No:** Not active	0	1	0	3123		1	2 - 2	RW	No	3
ID52	User logout time	The time user remains logged in to service mode without doing any actions before automatically logged out 30…1200 (in seconds)	30	1200	360	3067		2	1 - 2	RW	Yes	3 & 6, 16
ID53	ICAD name	Name assigned to ICAD as the identification shown on built-in display and for connection via Bluetooth. 16 ASCII symbols, 8bits per symbol (2 symbols per register)			ICAD	3068 … 3075	3353 … 3360	30	1 - 2	RW	Yes	3 & 6, 16
ID54	Bluetooth enable	Enable ICAD to broadcast Bluetooth for remote connection via APP. **1: enable;** **0: disable**	0	1	1	3076	3361	1	1 - 2	RW	Yes	3 & 6, 16
ID236	Factory reset	**Factory reset action for ICAD** **1: Yes:** All parameters will be returned to factory default settings, and the event log will be cleared. The parameter will automatically be set back to 'no' when factory reset has finished **0: No:** Not active	0	1	0	3087		1	2 - 2	RW	No	3 & 6, 16

Service/Display Parameters

Label ID	Parameter name	Description and selection options	Min.	Max.	Factory setting	Modbus address	Alternative Modbus address	Size in bytes	Password level to Read - Write	Read only (RO) / Read Write (RW) / Write (W)	Persistent Yes/No	Modbus function
ID56	Backlight	Manage the backlight level of the built-in display on ICAD **1...100%** (min step – 1%)	1	100	50	3091	3381	1	1 - 2	RW	Yes	3 & 6, 16
ID57	Contrast	Manage the contrast level of the built-in display on ICAD **1...100%** (min step – 1%)	1	100	50	3092	3382	1	1 - 2	RW	Yes	3 & 6, 16

Service/Network Parameters, (RS485)

Label ID	Parameter name	Description and selection options	Min.	Max.	Factory setting	Modbus address	Alternative Modbus address	Size in bytes	Password level to Read - Write	Read only (RO) / Read Write (RW) / Write (W)	Persistent Yes/No	Modbus function
ID58	Modbus network address	**Modbus RS485 network address of ICAD** This is shown in display when the ICAD supports Modbus communication and Modbus is enabled.	1	247	1	3100	3391	1	1 - 2	RW	Yes	3 & 6, 16
ID59	Modbus baud rate	The baud rate your Modbus RS485 controller uses to be able to communicate with ICAD via Modbus. **8: 115200** **7: 57600;** **6: 38400;** **5: 19200;** **4: 14400;** **3: 9600;** **2: 4800;** **1: 2400;** **0: 1200;**	0	8	6	3101	3392	1	1 - 2	RW	Yes	3 & 6, 16
ID61	Modbus parity	Set via **com type** on display: **2:** even **1:** odd **0:** no parity Other = custom setup via Modbus	0	2	2	3102	3393	1	1 - 2	RW	Yes	3 & 6, 16
ID63	Modbus stops bits	Modbus stops bits **1:** 2 bits; **0:** 1 bit	0	1	0	3103	3394	1	1 - 2	RW	Yes	3 & 6, 16

Label ID	Parameter name	Description and selection options	Min.	Max.	Factory setting	Modbus address	Alternative Modbus address	Size in bytes	Password level to Read - Write	Read only (RO) / Read Write (RW) / Write (W)	Persistent Yes/No	Modbus function
ID237	Modbus enable	Enable/disable Modbus to manage if data can be read and set via Modbus connection. **1: enable;** **0: disable**	0	1	1	3104	3395	1	1 - 2	RW	Yes	3 & 6, 16
ID155	Modbus heartbeat enable	Active when ID2 is modulating and ID3 is modbus **1: enable;** **0: disable**	0	1	0	3093	3378	2	1 - 2	RW	Yes	3 & 6, 16
ID156	Modbus heartbeat interval	When ID155 Modbus heartbeat is enabled. The interval with which the PLC should send Modbus requests to ICAD. If the ICAD does not receive any (read/write parameter) Modbus request during this interval, the A3 Alarm (signal lost) will be set 5…120 seconds (min step – 1)	5	120	30	3094	3379	2	1 - 2	RW	Yes	3 & 6, 16

Service/Network Parameters, (Ethernet)

Label ID	Parameter name	Description and selection options	Min.	Max.	Factory setting	Modbus address	Alternative Modbus address	Size in bytes	Password level to Read - Write	Read only (RO) / Read Write (RW) / Write (W)	Persistent Yes/No	Modbus function
ID116	IP address mode	Use parameters ID112, ID113, ID114 to set a Static IP. Read the current automatically received with DHCP or Auto IP address in the ID114 parameter. **2:** Auto IP; **1:** DHCP[1]; **0:** Static IP	0	2	0	3180	3383	2	1 - 2	RW	Yes	3 & 6, 16
ID115	Ethernet port	System **Port 502** is reserved specifically for Modbus applications. If you change this parameter, you must be sure what you are doing. The following ports are used by the Modbus/TCP protocol: • By default, the protocol uses Port 502 as local port in the Modbus server. • You can set the local port as you wish in the Modbus client. Usually, port numbers starting at 2000 are used. **If the communication partners offer the option of setting the port numbers for the server, then it is also possible to communicate using the Modbus/TCP protocol via a port other than Port 502.*	1	32764	502	3181	3384	2	1 - 2	RW	Yes	3 & 6, 16
ID114	Ethernet IP address	Set the desired static IP address or read the automatically received IP. Should be different from ID113 default gateway parameter. 0x00000000…0xDFFFFFFF (4 x 8-bit values, e.g. 0xff010203 = 255.01.02.03 address)	0x00000000	0xDFFFFFFF	0xC0A80202 192.168.2.2	3182 … 3183	3385 … 3386	4	1 - 2	RW	Yes	Only multiple write allowed 16 & 3
ID113	Ethernet Default Gateway	*For static IP*	0x00000000	0xDFFFFFFF	0xC0A80001 192.168.0.1	3184 … 3185	3387 … 3388	4	1 - 2	RW	Yes	3
ID112	Ethernet Subnet Mask	*For static IP*	0x00000000	0xDFFFFFFF	0xFFFFFF00 255.255.255.0	3186 … 3187	3389 … 3390	4	1 - 2	RW	Yes	3

[1] The device first makes a request to a DHCP server for an address. If the device does not receive an IP address, which happens when there is no DHCP server on the network or when the DHCP server is not responding, the device assigns itself an address. Auto IP addresses always follow this pattern: 169.254.x.y, where x and y are any two numbers between 0 and 255. Unlike DHCP, Auto IP does not require a router or a separate server to assign an IP address.

Status/I/O Status

Label ID	Parameter name	Description and selection options	Min.	Max.	Factory setting	Modbus address	Alternative Modbus address	Size in bytes	Password level to Read - Write	Read only (RO) / Read Write (RW) / Write (W)	Persistent Yes/No	Modbus function
ID37	DI	Readout the digital input when the operation mode (ID2) is set to ON/OFF or 3-point control. **3:** DI1 - on, DI2 - on; **2:** DI1 - off, DI2 - on; **1:** DI1- on, DI2 - off; **0:** DI1- off, DI2 - off; **Note that for ON/OFF only DI1 is active:** **1:** DI1 - on **0:** DI1 - off	0	3	0	3044	3328	1	1	RO	No	3
ID38	DO (fully close)	DO Fully closed status (ON when OD < 3%) **1:** Yes; **0:** No	0	1	0	3045	3329	1	1	RO	No	3
ID39	DO (fully open)	DO Fully opened status (ON when OD > 97%) **1:** Yes; **0:** No	0	1	0	3046	3330	1	1	RO	No	3
ID40	DO (alarm show)	DO common alarm status (Active when there are active alarms) **1:** Active; **0:** OFF	0	1	0	3047	3331	1	1	RO	No	3

Status/Next Service

Label ID	Parameter name	Description and selection options	Min.	Max.	Factory setting	Modbus address	Alternative Modbus address	Size in bytes	Password level to Read - Write	Read only (RO) / Read Write (RW) / Write (W)	Persistent Yes/No	Modbus function
ID233	Time overdue	Once the service interval has passed, and Time to next service (ID50) has reached 0, the time overdue is calculated. Time is updated every 30 minutes and calculated as full days (24 hours) based on runtime. 0...32764 (in days)	0	32764	0	3063	3350	2	1	RO	Yes	3
ID50	Time to next service	Readout the days remaining of the current service interval (ID234). Time is updated every 30 minutes and calculated as full days (24 hours) based on runtime. 0…999 (in days)	0	999	365	3064	3351	2	1	RO	Yes	3
ID48	Run time	Readout the run time in full hours for the ICAD from when it was first powered on or factory reset. Saved every 30min 0…4294967293 (in minutes)	0	4294967293	0	3060 ... 3061	3347 ... 3348	4	1	RO	Yes	3

Status/Supply

Label ID	Parameter name	Description and selection options	Min.	Max.	Factory setting	Modbus address	Alternative Modbus address	Size in bytes	Password level to Read - Write	Read only (RO) / Read Write (RW) / Write (W)	Persistent Yes/No	Modbus function
ID228	Power supply voltage (V)	Readout the current power supply voltage to ICAD in Volt. 0...300 points, where 10 = 1V (I.e. 234 = 23.4V; 100 = 10.0V)	0	300	0	3054	3336	2	1	RO	No	3
ID227	UPS health	Readout the state of the UPS. Only active when UPS supply (ID21) is set to yes and the UPS setting (ID22) is not set to off. **1:** OK; **0:** Poor	0	1	0	3052	3335	1	1	RO	No	3

Status/Read Outs Parameters

Label ID	Parameter name	Description and selection options	Min.	Max.	Factory setting	Modbus address	Alternative Modbus address	Size in bytes	Password level to Read - Write	Read only (RO) / Read Write (RW) / Write (W)	Persistent Yes/No	Modbus function
ID1	Main switch	Readout the main switch state of ICAD. **2:** config; **1:** manual; **0:** auto	0	2	0	3055	3337	1	1	RO	No	3
ID2	Mode	Readout ICAD mode **2:** 3 – point; **1:** on/off; **0:** modulating	0	2	0	3001	3301	1	1 - 2	RW	Yes	3 & 6, 16
ID8	Valve configuration	Readout the valve configuration for ICAD. **12:** ICADTS ICMTS 50/80; **11:** ICADTS ICMTS20; **10:** Pilot Valve CVE; **9:** ICAD1200B ICM150; **8:** ICAD1200B ICM125; **7:** ICAD1200B ICM100; **6:** ICAD1200B ICM65; **5:** ICAD1200B ICM50; **4:** ICAD1200B ICM40; **3:** ICAD600B ICM32; **2:** ICAD600B ICM25; **1:** ICAD600B ICM20; **0:** not configured	0	13	0	3056	3338	1	1	RO	No	3
ID34	AI (current, mA)	Readout the analog input when the operation mode (ID2) is set to modulating and the input signal (ID3) is set to use current (0-20mA or 4-20mA) 0…22000 points, where 1000 = 1mA (I.e. 10031 = 10.031mA; 7062 = 7.062mA)	0	22000	0	3041	3325	2	1	RO	No	3
ID35	AI (voltage, V)	Readout the analog input when the operation mode (ID2) is set to modulating and the input signal (ID3) is set to use voltage (0-10V or 2-10V) 0…12000 points, where 1000 = 1V (I.e. 1291 = 1.291V; 10372 = 10.372V)	0	12000	0	3042	3326	2	1	RO	No	3

Label ID	Parameter name	Description and selection options	Min.	Max.	Factory setting	Modbus address	Alternative Modbus address	Size in bytes	Password level to Read - Write	Read only (RO) / Read Write (RW) / Write (W)	Persistent Yes/No	Modbus function
ID36	AO (current, mA)	Readout the analog output when AO signal output (ID18) is set to use (0-20mA or 4-20mA) 0…22000 points, where 1000 = 1mA (I.e. 10031 =10.031mA; 7062 = 7.062mA)	0	22000	0	3043	3327	2	1	RO	No	3
ID21	UPS supply	Readout of Uninterruptible Power Supply (UPS) is applied to the ICAD. This enabled A4 alarms (Low voltage of UPS supply). **1:** yes; **0:** no	0	1	0	3023	3308	1	1 - 2	RW	Yes	3 & 6, 16
ID20	Emergency state	Readout of the requested valve position for safe state. Safe state occurs for A2, A3, A5, A8, A10, and can be a result of the boosting process during A9. **3:** emergency opening degree (set position to ID27) **2:** maintain position; **1:** open valve; **0:** close valve;	0	3	0	3022	3319	1	1 - 2	RW	Yes	3 & 6, 16
ID28	Boost action	Readout of boost action. How to manage when the opening degree is outside of the threshold of the max offset allowed (ID30). **2:Once**: If boosting for 15 seconds did not allow to get back into position, then A9 alarm is raised and ICAD goes to Safe state (ID20) (if feasible), no calibration. **1: Cycling:** Keep boosting 15 seconds, break for the time specified as boost delay (ID29), then raise A9 alarm. Cycle continues position has been regained. **Note: It is not recommended to change this setting from default.**	1	2	1	3030		1	2 - 2	RW	Yes	3 & 6, 16
ID29	Boost delay	Readout of boost delay. Minutes after boost before next boost and raise of A9 alarm. 1…30 minutes (min step – 1) **Note: It is not recommended to change this setting from default.**	1	30	1	3031		1	2 - 2	RW	Yes	3 & 6, 16
ID30	Max offset	Max offset value between encoder position and step counter position before boosting starts. **3…15%** (min step – 1%)	3	15	3	3032		1	2 - 2	RW	Yes	3 & 6, 16

Label ID	Parameter name	Description and selection options	Min.	Max.	Factory setting	Modbus address	Alternative Modbus address	Size in bytes	Password level to Read - Write	Read only (RO) / Read Write (RW) / Write (W)	Persistent Yes/No	Modbus function
ID31	Reset A9 Alarms	Define how to Reset/ Suppress A9 alarm and DO Common Alarm ON. **2: Suppress:** Ignore detection of the stall. No alarm is raised and DO Common Alarm output remains OFF. **1: Auto:** Reset when it is within max offset (ID30) limit again and reset delay time (ID32) has elapsed **0: Manually:** User resets alarm using the reset alarm action. **Note: It is not recommended to change this setting from default.**	0	2	1	3033		1	2 - 2	RW	Yes	3 & 6, 16
ID32	Reset A9 Alarm delay	Define the reset delay for A9 alarms. Only active when reset A9 alarm (ID31) is set to auto. 1…20 minutes (min step – 1) **Note: It is not recommended to change this setting from default, and this value should always be longer than the boost delay (ID29)**	1	20	5	3034		1	2 - 2	RW	Yes	3 & 6, 16
ID42	Temperature	Readout the internal temperature measured on the ICAD motor board in degree celcius. -500...1400 points, where 10 = 1°C (I.e. -125 = -12.5°C; 1245 = 124.5°C)	-500	1400	0	3050	3334	2	1	RO	No	3
ID54	Bluetooth	Manage if ICAD broadcasts Bluetooth for remote connection via APP. **1: enable;** **0: disable**	0	1	1	3076	3361	1	1 - 2	RW	Yes	3 & 6, 16
ID237	Modbus	Enable/disable Modbus to manage if data can be read and set via Modbus connection. **1 = enable;** **0 = disable**	0	1	1	3104	3395	1	1 - 2	RW	Yes	3 & 6, 16

Alarms/Alarm Parameters

Label ID	Parameter name	Description and selection options	Min.	Max.	Factory setting	Modbus address	Alternative Modbus address	Size in bytes	Password level to Read - Write	Read only (RO) / Read Write (RW) / Write (W)	Persistent Yes/No	Modbus function
ID120	A1 timestamp (Warn: Valve no config)	Timestamp of the alarm occurrence relative to the runtime counter (ID48), Or -1 (0xFFFFFFFF in hex) if the alarm is not set [**ID48** (while the device is working)] - [event/alarm **timestamp** (point in ID48 at which the current event occurred)] = minutes that have passed since the event/ alarm occurred (to show **XX minutes(or hours) ago)**	-1	4294967294	4294967295 (-1, or 0xFFFFFFFF in hex)	3200 … 3201	3404 … 3405	4	1	RO	No	3
ID121	A2(1) timestamp (Alarm: IO MCU comm fail)	Timestamp of the alarm occurrence relative to the runtime counter (ID48), Or -1 (0xFFFFFFFF in hex) if the alarm is not set	-1	4294967294	4294967295 (-1, or 0xFFFFFFFF in hex)	3202 … 3203	3406 … 3407	4	1	RO	No	3
ID122	A2(2) timestamp (Alarm: Motor open-load status)	Timestamp of the alarm occurrence relative to the runtime counter (ID48), Or -1 (0xFFFFFFFF in hex) if the alarm is not set	-1	4294967294	4294967295 (-1, or 0xFFFFFFFF in hex)	3204 … 3205	3408 … 3409	4	1	RO	No	3
ID123	A3(1) timestamp (Alarm: AI error: > 22 mA)	Timestamp of the alarm occurrence relative to the runtime counter (ID48), Or -1 (0xFFFFFFFF in hex) if the alarm is not set	-1	4294967294	4294967295 (-1, or 0xFFFFFFFF in hex)	3206 … 3207	3410 … 3411	4	1	RO	No	3
ID124	A3(2) timestamp (Alarm: AI error: < 2 mA)	Timestamp of the alarm occurrence relative to the runtime counter (ID48), Or -1 (0xFFFFFFFF in hex) if the alarm is not set	-1	4294967294	4294967295 (-1, or 0xFFFFFFFF in hex)	3208 … 3209	3412 … 3413	4	1	RO	No	3
ID125	A3(3) timestamp (Alarm: AI error: > 12 V)	Timestamp of the alarm occurrence relative to the runtime counter (ID48), Or -1 (0xFFFFFFFF in hex) if the alarm is not set	-1	4294967294	4294967295 (-1, or 0xFFFFFFFF in hex)	3210 … 3211	3414 … 3415	4	1	RO	No	3
ID126	A3(4) timestamp (Alarm: AI error: < 1 V)	Timestamp of the alarm occurrence relative to the runtime counter (ID48), Or -1 (0xFFFFFFFF in hex) if the alarm is not set	-1	4294967294	4294967295 (-1, or 0xFFFFFFFF in hex)	3212 … 3213	3416 … 3417	4	1	RO	No	3
ID127	A4 timestamp (Alarm: V FSS error)	Timestamp of the alarm occurrence relative to the runtime counter (ID48), Or -1 (0xFFFFFFFF in hex) if the alarm is not set	-1	4294967294	4294967295 (-1, or 0xFFFFFFFF in hex)	3214 … 3215	3418 … 3419	4	1	RO	No	3
ID128	A5 timestamp (Alarm: V PS error)	Timestamp of the alarm occurrence relative to the runtime counter (ID48), Or -1 (0xFFFFFFFF in hex) if the alarm is not set	-1	4294967294	4294967295 (-1, or 0xFFFFFFFF in hex)	3216 … 3217	3420 … 3421	4	1	RO	No	3
ID129	A6 timestamp (Alarm: Calibr fail)	Timestamp of the alarm occurrence relative to the runtime counter (ID48), Or -1 (0xFFFFFFFF in hex) if the alarm is not set	-1	4294967294	4294967295 (-1, or 0xFFFFFFFF in hex)	3218 … 3219	3422 … 3423	4	1	RO	No	3
ID130	A7 timestamp (Alarm: Overheating)	Timestamp of the alarm occurrence relative to the runtime counter (ID48), Or -1 (0xFFFFFFFF in hex) if the alarm is not set	-1	4294967294	4294967295 (-1, or 0xFFFFFFFF in hex)	3220 … 3221	3424 … 3425	4	1	RO	No	3

Label ID	Parameter name	Description and selection options	Min.	Max.	Factory setting	Modbus address	Alternative Modbus address	Size in bytes	Password level to Read - Write	Read only (RO) / Read Write (RW) / Write (W)	Persistent Yes/No	Modbus function
ID131	A8 timestamp (Alarm: Overheating)	Timestamp of the alarm occurrence relative to the runtime counter (ID48), Or -1 (0xFFFFFFFF in hex) if the alarm is not set	-1	4294967294	4294967295 (-1, or 0xFFFFFFFF in hex)	3222 … 3223	3426 … 3427	4	1	RO	No	3
ID132	A9 timestamp (Alarm: POM mode)	Timestamp of the alarm occurrence relative to the runtime counter (ID48), Or -1 (0xFFFFFFFF in hex) if the alarm is not set	-1	4294967294	4294967295 (-1, or 0xFFFFFFFF in hex)	3224 … 3225	3428 … 3429	4	1	RO	No	3
ID133	A10 timestamp (Alarm: SPI conn loss)	Timestamp of the alarm occurrence relative to the runtime counter (ID48), Or -1 (0xFFFFFFFF in hex) if the alarm is not set	-1	4294967294	4294967295 (-1, or 0xFFFFFFFF in hex)	3226 … 3227	3430 … 3431	4	1	RO	No	3
ID134	A11 timestamp (*reserved*)	Timestamp of the alarm occurrence relative to the runtime counter (ID48), Or -1 (0xFFFFFFFF in hex) if the alarm is not set	-1	4294967294	4294967295 (-1, or 0xFFFFFFFF in hex)	3228 … 3229	3432 … 3433	4	1	RO	No	3
ID135	A13 timestamp (Alarm: Failed update)	Timestamp of the alarm occurrence relative to the runtime counter (ID48), Or -1 (0xFFFFFFFF in hex) if the alarm is not set	-1	4294967294	4294967295 (-1, or 0xFFFFFFFF in hex)	3230 … 3231	3434 … 3435	4	1	RO	No	3
ID136	A14 timestamp (Warn: SoH is bad)	Timestamp of the alarm occurrence relative to the runtime counter (ID48), Or -1 (0xFFFFFFFF in hex) if the alarm is not set	-1	4294967294	4294967295 (-1, or 0xFFFFFFFF in hex)	3232 … 3233	3436 … 3437	4	1	RO	No	3
ID137	A15 timestamp (Warn: Service overdue)	Timestamp of the alarm occurrence relative to the runtime counter (ID48), Or -1 (0xFFFFFFFF in hex) if the alarm is not set	-1	4294967294	4294967295 (-1, or 0xFFFFFFFF in hex)	3234 … 3235	3438 … 3439	4	1	RO	No	3
ID138	A16 timestamp (Warn: Config. mode)	Timestamp of the alarm occurrence relative to the runtime counter (ID48), Or -1 (0xFFFFFFFF in hex) if the alarm is not set	-1	4294967294	4294967295 (-1, or 0xFFFFFFFF in hex)	3236 … 3237	3440 … 3441	4	1	RO	No	3
ID139	A17 timestamp (Warn: Bluetooth conn)	Timestamp of the alarm occurrence relative to the runtime counter (ID48), Or -1 (0xFFFFFFFF in hex) if the alarm is not set	-1	4294967294	4294967295 (-1, or 0xFFFFFFFF in hex)	3238 … 3239	3442 … 3443	4	1	RO	No	3
ID140	A18 timestamp (Warn: Vin >24+10%)	Timestamp of the alarm occurrence relative to the runtime counter (ID48), Or -1 (0xFFFFFFFF in hex) if the alarm is not set	-1	4294967294	4294967295 (-1, or 0xFFFFFFFF in hex)	3240 … 3241	3444 … 3445	4	1	RO	No	3
ID141	A19 timestamp (Warn: Vin <24-15%)	Timestamp of the alarm occurrence relative to the runtime counter (ID48), Or -1 (0xFFFFFFFF in hex) if the alarm is not set	-1	4294967294	4294967295 (-1, or 0xFFFFFFFF in hex)	3242 … 3243	3446 … 3447	4	1	RO	No	3
ID146	A20 timestamp (Alarm: Detection fail)	Timestamp of the alarm occurrence relative to the runtime counter (ID48), Or -1 (0xFFFFFFFF in hex) if the alarm is not set	-1	4294967294	4294967295 (-1, or 0xFFFFFFFF in hex)	3244 … 3245	3448 … 3449	4	1	RO	No	3
ID148	A2(3) timestamp (Alarm: EEPROM operation fail)	Timestamp of the alarm occurrence relative to the runtime counter (ID48), Or -1 (0xFFFFFFFF in hex) if the alarm is not set	-1	4294967294	4294967295 (-1, or 0xFFFFFFFF in hex)	3246 … 3247	3450 … 3451	4	1	RO	No	3

Label ID	Parameter name	Description and selection options	Min.	Max.	Factory setting	Modbus address	Alternative Modbus address	Size in bytes	Password level to Read - Write	Read only (RO) / Read Write (RW) / Write (W)	Persistent Yes/No	Modbus function
ID149	A2(4) timestamp (Alarm: Bluetooth MCU comm fail)	Timestamp of the alarm occurrence relative to the runtime counter (ID48), Or -1 (0xFFFFFFFF in hex) if the alarm is not set	-1	4294967294	4294967295 (-1, or 0xFFFFFFFF in hex)	3248 … 3249	3452 … 3453	4	1	RO	No	3
ID150	A3(5) timestamp (Alarm: Modbus connection lost)	Timestamp of the alarm occurrence relative to the runtime counter (ID48), Or -1 (0xFFFFFFFF in hex) if the alarm is not set	-1	4294967294	4294967295 (-1, or 0xFFFFFFFF in hex)	3250 … 3251	3454 … 3455	4	1	RO	No	3
ID152	A1(2) timestamp (Warn: Input signal not configured)	Timestamp of the alarm occurrence relative to the runtime counter (ID48), Or -1 (0xFFFFFFFF in hex) if the alarm is not set	-1	4294967294	4294967295 (-1, or 0xFFFFFFFF in hex)	3252 … 3253	3456 … 3457	4	1	RO	No	3

Alarms/Event Log Parameters

Label ID	Parameter name	Description and selection options	Min.	Max.	Factory setting	Modbus address	Alternative Modbus address	Size in bytes	Password level to Read - Write	Read only (RO) / Read Write (RW) / Write (W)	Persistent Yes/No	Modbus function
ID43	Stalls	Readout the total stalls (times ICAD stopped due to A9 alarms) done by the ICAD from when it was first powered on. Saved every 30min.	0	32764	0	3120	3396	2	1	RO	Yes	3
ID46	Full strokes	Readout the total strokes (movement) done by the ICAD from when it was first powered on. Saved every 30min. Full strokes are defined as 0% to 100% to 0% opening degree.	0	4294967293	0	3121 ... 3122	3397 ... 3398	4	1	RO	Yes	3
ID230	Alarm A9 (total counter)	Total number of A9 alarms for the ICAD is tracked.	0	32764	0	3124	3399	2	1	RO	Yes	3

Label ID	Parameter name	Description and selection options	Min.	Max.	Factory setting	Modbus address	Alternative Modbus address	Size in bytes	Password level to Read - Write	Read only (RO) / Read Write (RW) / Write (W)	Persistent Yes/No	Modbus function
ID241	Active alarms	Shows active alarms (e.g. value 0x00000406 = 0000 0000 0000 0000 0000 0100 0000 0110 -> alarms A2, A3, A8 have been set and active) **0th bit:** A2 (IO MCU comm fail); **1st bit:** A2 (open-load status); **2nd bit:** A3 (AI error: > 22 mA); **3rd bit:** A3 (AI error: < 2 mA); **4th bit:** A3 (AI error: > 12 V); **5th bit:** A3 (AI error: < 1 V); **6th bit:** A4 (V FSS error); **7th bit:** A5 (V PS error); **8th bit:** A6 (Calibr fail); **9th bit:** A7 (Overheating); **10th bit:** A8 (Overheating); **11th bit:** A9 (POM mode); **12th bit:** A10 (SPI conn loss); **13th bit:** A13 (Failed update); **14th bit:** A20 (Detection fail); **15th bit:** A2 (EEPROM operation fail); **16th bit:** A2 (Bluetooth MCU comm fail); **17th bit:** A3 (Modbus connection lost)			0	3129 ... 3130	3400 ... 3401	4	1	RO	No	3
ID248	Active warnings	Shows active warnings **0th bit:** A1 (Valve not config); **1st bit:** A11 (*reserved*); **2nd bit:** A14 (SoH is bad); **3rd bit:** A15 (Service overdue); **4th bit:** A16 (Config. mode); **5th bit:** A17 (Bluetooth conn); **6th bit:** A18 (Vin >24+10%); **7th bit:** A19 (Vin <24-15%); **8th bit:** A1 (Input not config)			0	3131	3402	2	1	RO	No	3
ID232	Total events	Total number of events in the event log (the maximum value is changeable, depends on the types of events in the event log)	0	1000	0	3132	3403	2	1	RO	No	3

Info

Label ID	Parameter name	Description and selection options	Min.	Max.	Factory setting	Modbus address	Alternative Modbus address	Size in bytes	Password level to Read - Write	Read only (RO) / Read Write (RW) / Write (W)	Persistent Yes/No	Modbus function
ID53	ICAD name	Name assigned to ICAD as the identification shown on built-in display and for connection via Bluetooth. 16 ASCII symbols, 8bits per symbol (2 symbols per register)		ICAD	3068 … 3075	3353 … 3360	30	1 - 2	RW	Yes	**3 & 6, 16**	
ID253	ICAD model	Readout the ICAD model type. **3:** ICADB TS **2:** ICAD 1200B; **1:** ICAD 600B; **0:** not configured;	0	3	0	3057	3339	1	1	RO	Yes	3
ID8	Valve configuration	Readout the valve configuration for ICAD **12:** ICADBTS ICMTS 50/80; **11:** ICADBTS ICMTS20; **10:** Pilot Valve CVE; **9:** ICAD1200B ICM150; **8:** ICAD1200B ICM125; **7:** ICAD1200B ICM100; **6:** ICAD1200B ICM65; **5:** ICAD1200B ICM50; **4:** ICAD1200B ICM40; **3:** ICAD600B ICM32; **2:** ICAD600B ICM25; **1:** ICAD600B ICM20; **0:** not configured	0	13	0	3056	3338	1	1	RO	No	3
ID221	SW Version (High)	Readout the sofware version of ICAD **nn**.xx	0	255	0	3048	3332	1	1	RO	No	3
ID222	SW Version (Low)	Readout the sofware version of ICAD xx.**nn**	0	255	0	3049	3333	1	1	RO	No	3
ID143	Hardware version	Format MM.CC (1 byte Motor PCB, 1 byte Connector PCB) (e.g. value 0x0102 = 01.02v -> 01 Motor PCB version, 02 Connector PCB version) (reserved up to 0xFFFFFFFF)	0x0000	0xFFFF	0x0000	3156 … 3157	3345 … 3346	4	1	RO	No	3
ID102	Previously configured	Indicates if this ICAD has previously been configured. This controls when the setup wizard is shown when connecting to ICAD via the APP. **1:** configured; **0:** not configured	0	1	0	3089		1	1 - 2	RW	Yes	3 & 6, 16
ID235	Serial number	The unique serial number of ICAD. Number generated by: nnnnnnnCCCCCCCCPPWWYY - running number (n) + Product number (Cs) + Mfg place& time nnnnnnn part - 2 registers CCCCCCCC PP parts - 5 registers, in ASCII symbols, 8bits per symbol (2 symbols per register) WW part - 1 register YY part - 1 register D part - 1 register			0	3077 … 3086	3362 … 3371	30	1	RO	Yes	3
ID48	Run time	Readout the run time in full minutes for the ICAD from when it was first powered on. Saved every 30min (in minutes)	0	4294967293	0	3060 ... 3061	3347 ... 3348	4	1	RO	Yes	3 & 6, 16

Non-displayed Parameters

Label ID	Parameter name	Description and selection options	Min.	Max.	Factory setting	Modbus address	Alternative Modbus address	Size in bytes	Password level to Read - Write	Read only (RO) / Read Write (RW) / Write (W)	Persistent Yes/No	Modbus function
ID55	Screen saver	Manage the time elapsed without user actions before the built-in display of ICAD goes to sleep mode (in seconds). Pressing any button ends the screen saver mode	30	1200	360	3090	3380	**2**	**1 - 2**	RW	Yes	**3 & 6, 16**
ID226	Status	Readout the current ICAD status **6: Config:** ICAD continues to operate as before. In config mode parameters can be changed but are not applied until setting main switch back to auto or manual **5: Valve detection:** ICAD is currently detecting a valve **4: Safe state:** ICAD has stopped operation and applied the emergency state setting (ID20) **3: Boost:** ICAD is currently boosting to achieve the requested position **2: Calibration:** ICAD is currently calibrating **1: Manual:** User manually sets the valve position to be maintained **0: Auto:** Input signal type (ID3) controls valve position	0	6	0	3051	3322	**1**	**1**	RO	No	**3**
ID33	Current OD	Readout the opening degree (OD). 0…10000 points, where 100 = 1% (I.e. 5219 = 052.19%; 10000 = 100.00%)	0	10000	0	3040	3323	**2**	**1**	RO	No	**3**
ID211	Requested OD	Readout the requested opening degree automatically matching the settings for input type and operation mode. 0…10000 points, where 100 = 1% (I.e. 5219 = 052.19%; 10000 = 100.00%)	0	10000	0	3053	3324	**2**	**1**	RO	No	**3**
ID254	Current access level	Readout the current access level corresponding to user login. This manages rights for reading and writing parameters, and controls what the user sees **3:Danfoss Admin;** **2: Service;** **1: Read only**	1	3	1	3058	3340	**1**	**1-2**	RW	No	**3**
ID239	Battery voltage	Readout the current voltage of the UPS battery, when this is attached and enabled. 0...300 points, where 10 = 1V (I.e. 234 = 23.4V; 100 = 10.0V)	0	300	0	3059	3341	**1**	**1**	RO	No	**3**

Label ID	Parameter name	Description and selection options	Min.	Max.	Factory setting	Modbus address	Alternative Modbus address	Size in bytes	Password level to Read - Write	Read only (RO) / Read Write (RW) / Write (W)	Persistent Yes/No	Modbus function
ID103	Controller ID	Readout the controller ID to determine that this is an ICAD. 70 = ICAD			70	5001			**1**	RO	No	
ID231	REBOOT	Reboot ICAD **1: Yes:** The device will reboot. The parameter will automatically be set back to 'no' **0: No:** Not active	0	1	0	3088		**1**	**2 - 2**	RW	No	**3 & 6, 16**
ID100	Passcode entry	Enter password for level 2 or level 3 access	0	99999999	0	3160 … 3161		**4**	**1**	W	No	**16**

Certificates, declarations, and approvals

The list contains all certificates, declarations, and approvals for this product type. Individual code number may have some or all of these approvals, and certain local approvals may not appear on the list.

Some approvals may change over time. You can check the most current status at danfoss.com or contact your local Danfoss representative if you have any questions.

ICM

The ICV valve concept is designed to fulfil global refrigeration requirements.

ICM is CE, UL and CRN approved.

For specific approval information, please contact Danfoss.

The ICM valves are approved in accordance with the European standard specified in the Pressure Equipment Directive and are CE marked. For further details / restrictions - see Installation guide.

Table 80: Conformity aprrovals

ICM valves				
CE	Nominal bore	DN≤ 25 (1 in.)	DN 32 – 65 (1 1/4 – 2 ½ in.)	DN 80 – 125 (3 – 5 in.)
	Classified for	Fluid group I		
	Category	Article 3, paragraph 3	II	III

ICAD

CE according to 89/336 EEC (EMC)
Emission : EN61000-6-3
Immunity: EN61000-6-2

REACH requirements
All Danfoss products fulfill the requirements in REACH. One of the obligations in REACH is to inform customers about presence of Candidate list substances if any, we hereby inform you about one substance on the candidate list: An O-ring used in ICAD 600A actuator contains 6,6'-di-tert-butylo-2,2'-metylenodi-p-krezol (CAS no: 119-47-1) in a concentration above 0.1% w/w.

ENGINEERING
TOMORROW

Online support

Danfoss offers a wide range of support along with our products, including digital product information, software, mobile apps, and expert guidance. See the possibilities below.

The Danfoss Product Store

The Danfoss Product Store is your one-stop shop for everything product related—no matter where you are in the world or what area of the cooling industry you work in. Get quick access to essential information like product specs, code numbers, technical documentation, certifications, accessories, and more.
Start browsing at store.danfoss.com.

Find technical documentation

Find the technical documentation you need to get your project up and running. Get direct access to our official collection of data sheets, certificates and declarations, manuals and guides, 3D models and drawings, case stories, brochures, and much more.

Start searching now at www.danfoss.com/en/service-and-support/documentation.

Get local information and support

Local Danfoss websites are the main sources for help and information about our company and products. Find product availability, get the latest regional news, or connect with a nearby expert—all in your own language.

Find your local Danfoss website here: www.danfoss.com/en/choose-region.

Danfoss Learning

Danfoss Learning is a free online learning platform. It features courses and materials specifically designed to help engineers, installers, service technicians, and wholesalers better understand the products, applications, industry topics, and trends that will help you do your job better.

Create your Danfoss Learning account for free at www.danfoss.com/en/service-and-support/learning.

Spare Parts

Get access to the Danfoss spare parts and service kit catalog right from your smartphone. The app contains a wide range of components for air conditioning and refrigeration applications, such as valves, strainers, pressure switches, and sensors.

Download the Spare Parts app for free at www.danfoss.com/en/service-and-support/downloads.

Coolselector®2 - find the best components for you HVAC/R system

Coolselector®2 makes it easy for engineers, consultants, and designers to find and order the best components for refrigeration and air conditioning systems. Run calculations based on your operating conditions and then choose the best setup for your system design.

Download Coolselector®2 for free at coolselector.danfoss.com.

Danfoss A/S
Climate Solutions • danfoss.com • +45 7488 2222

Any information, including, but not limited to information on selection of product, its application or use, product design, weight, dimensions, capacity or any other technical data in product manuals, catalogues descriptions, advertisements, etc. and whether made available in writing, orally, electronically, online or via download, shall be considered informative, and is only binding if and to the extent, explicit reference is made in a quotation or order confirmation. Danfoss cannot accept any responsibility for possible errors in catalogues, brochures, videos and other material.
Danfoss reserves the right to alter its products without notice. This also applies to products ordered but not delivered provided that such alterations can be made without changes to form, fit or function of the product.
All trademarks in this material are property of Danfoss A/S or Danfoss group companies. Danfoss and the Danfoss logo are trademarks of Danfoss A/S. All rights reserved.

ENGINEERING
TOMORROW

Data Sheet

Motor actuator for ICM/ICMTS motorized valves and CVE pilot valve Type **ICAD 600B/1200B** and **ICAD 600B-TS**

For precise and trouble-free control

ICAD actuators for direct control of ICM/ICMTS motorized valves and CVE pilot valve.

ICAD actuator can be controlled in multiple ways:

- Using the following signals:
  - 0 – 20 mA
  - 4 – 20 mA
  - 0 – 10 V
  - 2 – 10 V
- By a digital input (on-off)
- Via data communication:
  - Modbus RTU (RS485)
  - Modbus TCP/IP (Ethernet)

Valve opening can be manually controlled with ICAD actuator.

The actuators ICAD 600B and 1200B are designed for ICM valves and CVE pilot. The actuator type 600B-TS is dedicated specifically for ICMTS valves.

New design of flange connection for magnet coupling with ICM and ICMTS valves. ICAD B series and the new mounting design for magnet coupling is 100% backwards compatible with previous ICAD generation.

ICAD B incorporates an advanced MMI (Man Machine Interface) display with descriptive text and Icons, which gives the user a very intuitive, advanced and flexible set up procedure that can meet different applications.

In addition to the display interface, ICAD B also incorporates Bluethooth communication to a mobile app and data communication, which give the user alternative Interfaces for optimal efficiency and convenience when setting up an ICAD B.

AI466824817289en-000102

Features

- Specifically designed for ICM and ICMTS valves
- Advanced and high speed Digital Stepper Motor Technology
- Additional micro steps to provide more precise control
- High contrast LCD display and user friendly navigation keyboard
- Valve opening degree can be observed continuously
- Can easily be configured to different applications on-site. (change speed, ON/OFF, modulating valve)
- Data connection via RS485 or Ethernet
- In addition to the onboard display, all configuration and readings from ICAD B actuators can be performed via Bluetooth (using Coolconfig mobile app) or via data communication
- Modulating or ON/OFF operation
- Multiple speed selection during operation
- Logging of all events, warnings and alarms
- Password protection
- Multiple control options: Analog signals (0–20 mA, 4–20 mA, 0–10 V, 2–10 V), digital signal (On-off) and data communication (RS485 & Ethernet)
- Position feedback: Signals (0–20 mA , 4–20 mA) and Data communication (Rs485 & Ethernet)
- 3 digital ON/OFF feedback
- Resolution: 20 micron/step (0.02 mm stroke pr. step)
- Auto Calibration
- In the event of a power failure, multiple fail safe options are possible. During power failure, ICAD can be selected to:
  - Stay in the position it was in, prior to power failure. Go to a specific valve opening degree
  - Close the valve
  - Open the valve
- Includes encoder function that provide a true valve position feedback to Danfoss controller or non-Danfoss control systems
- Hermetic magnetic motor
- New design of hermetic flange connection to secure highest reliability of magnet coupling
- Enclosure: IP 67 (~NEMA 6)
- Approvals: CE, UL
- Connectors for easy installation and servicing
- Automatic Autodetection of valve where is mounted
- Quick Set up wizzard

Function

The design of ICAD is based on a digital stepper motor technology combined with an advanced MMI (Man Machine Interface), that gives excellent possibilities for having a high degree of flexibility with the same type of ICAD actuator.

The Opening Degree (0-100 %) of the actual ICM and ICMTS valves installed can be continuously observed on the ICAD display or the alternative interfaces (Mobile app and data communication).

The advanced menu system will allow several parameters to be adjusted to obtain the required function.

Many different parameters can be configurated, among these:
- Modulating and ON/OFF control
- Analog input
  0 – 20 mA or 4 – 20 mA
  0 – 10 V or 2 – 10 V
- Analog output
  0 – 20 mA or 4 – 20 mA
- Automatic or manual control
- Change of ICM/ICMTS valve speed
- Automatic calibration
- Autodetection for valve size
- Multiple Fail Safe set-up options during power cut

For service all Input and Output signals can be recalled and observed from the ICAD display.

A password protection has been linked to the parameter of entering the correct ICM/ICMTS valve to avoid unintentional and non-authorised operation.

Product specification

Technical data

Table 1: Technical data - Actuator

Features	Specifications
Materials	Housing: Aluminium Top part of ICAD: PBT thermo plastic
Weight	ICAD 600B: 1.65 kg (3.64 lb) ICAD 1200B: 2.29 kg (5.05 lb) ICAD 600B-TS: 1.73 kg (3.81 lb)
Temperature range (ambient)	–30 °C / +50 °C (–22 °F / 122 °F)
Enclosure	IP 67 (~NEMA 6)
Cable connection	Cables not included. To be ordered separately M12 connectors
Supply cable	4 × 0.34 mm^2 (3 × ~22 AWG) Ø4.8 mm (diameter 0.19”)
Control cable	7 × 0.25 mm^2 (7 × ~24 AWG) Ø6 mm (diameter 0.24”)
Data communication cable	4 x 0.08 mm^2 (4 × ~26 AWG) Ø6 mm (diameter 0.24”)

Electrical data

Table 2: Electrical connections

Features	Specifications
Electrical data	Supply voltage is galvanic isolated from Input/Output
Supply voltage	Load: 24 V DC (Tolerances; see Table 3) ICAD 600B, ICAD 600B-TS: 1.2 A ICAD 1200B: 2.0 A
Fail safe supply	24 V DC (Tolerances; see Table 3) Load ICAD 600B, ICAD 600B-TS: 1.2 A ICAD 1200B: 2.0 A
Analog input	Current: Input range: 0/4 – 20 mA Max input range: 0 – 24 mA Input resistance: 120 Ω + diode voltage 0.7 V DC Measurement error: <±1.5% of the full scale Reverse polarity protection: yes Overcurrent protection: yes
	Voltage: Input range: 0/2 – 10 V DC Max input range: 0 – 12 V DC Measurement error: <±1.5% of the full scale Reverse polarity protection: yes
Analog output	Output range: 0/4 – 20 mA Load: <800 Ω Output error: <±1.5% of the full scale
Digital input	*Digital ON/OFF input by means of voltfree contact (Signal/Telecom relays with gold-plated contacts recommended) – Voltage input used* Rth rise(OFF): >10 kΩ Rth fall(ON): < 45 Ω
Digital output	3 pcs. NPN transistor output
	External supply: 7 – 24 V DC (same supply as for ICAD can be used, but please note that the galvanically isolated system will then be spoiled).
	On resistance: 55 Ω + diode voltage 0.7 V DC Max 70 Ω at 50 mA Max Output current: 50 mA Reverse polarity protection: Yes Overcurrent protection: No

Table 3: ICAD supply voltage tolerances

Prefabricated ICAD cable length Code number		1.5 m	3 m	10 m	15 m
		027H0426	027H0438	027H0427	027H0435
Voltage ICAD terminal (600B/1200B) [V DC]	Min.	21	22	23	24
	Max.	26.4			

Cable connection

Figure 1: Cable connection

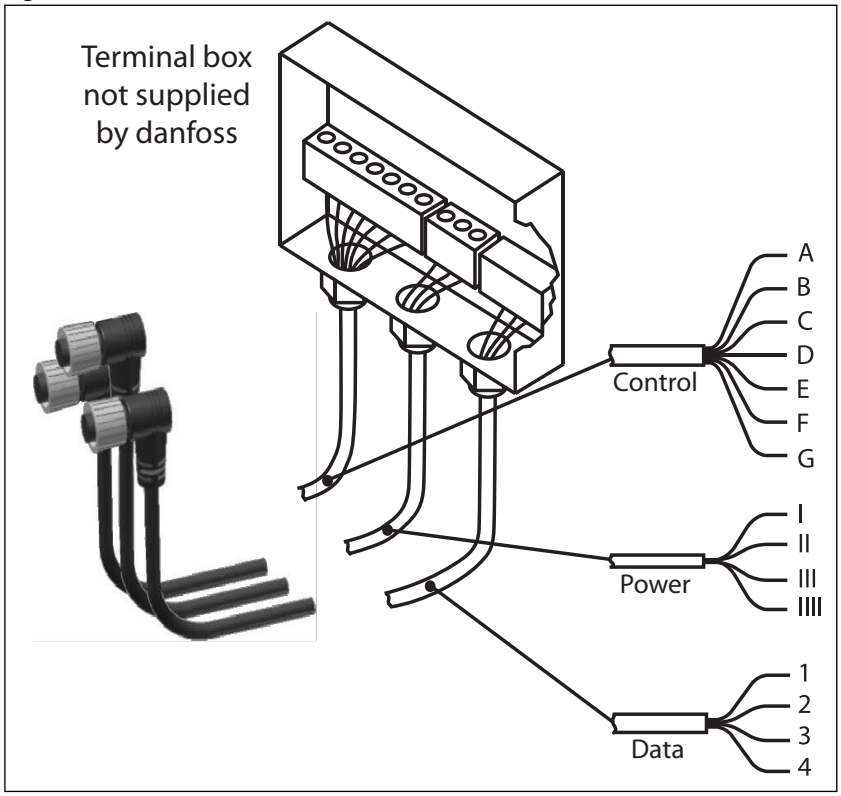

1	Control cable
2	Power supply cable
3	Data cable

Figure 2: Cable Connectors - Rear view

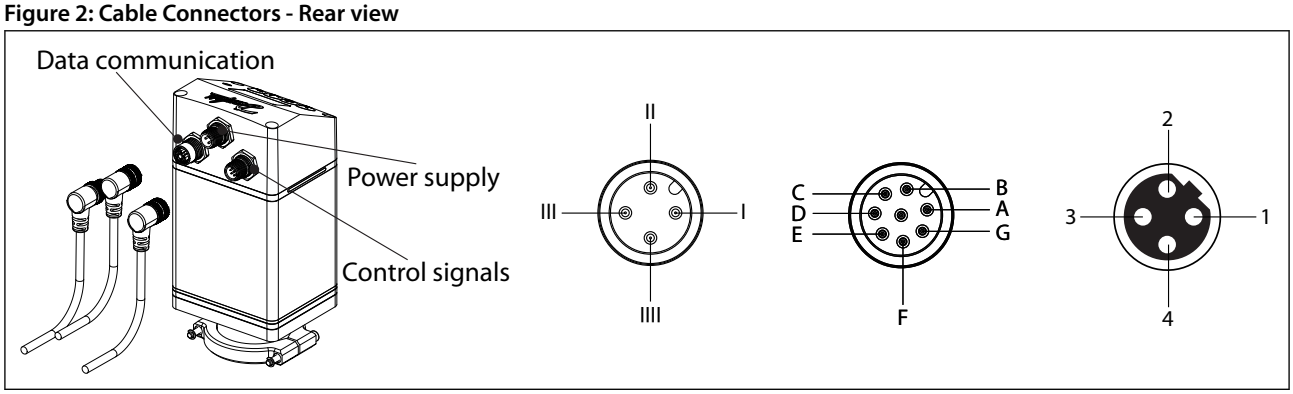

Figure 3: ICAD back Description

ICAD back

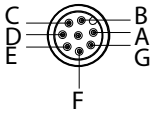

Ref	Color		Description	
A	Black	-	Common alarm	Digital output
B	Brown	-	ICM fully open	
C	Red	-	ICM fully closed	
D	Orange	-	GND ground	
E	Yellow	+	0/4 –20 mA Input	
F	Green	+	0/2 – 10 V input or digital input for on/off control	
G	Blue	+	0/4 – 20 mA Output	

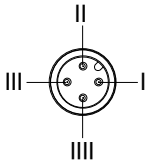

I	Black	+	Fail safe supply. Battery / UPS* 19 V DC
II	White	+	Supply voltage 24 V DC 2A, or more, per ICAD recommended ICAD PSU must be SELV**, >15 W
III	Brown	-	
IIII	Blue	+	UPS Signal of Health - optional depending on ID31: 'UPS supply' set to 'Yes'

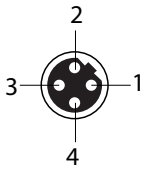

RS485/ Ethernet

1	White/Blue	(-) / TX+	Data – (B) / Transmit Pair(+)
2	White/Orange	GND / RX+	Ground / Receiving Pair(+)
3	Blue	(+) / TX-	Data + (A) / Transmit Pair(-)
4	Orange	GND / RX-	Ground / Receiving Pair(-)

*Uniterruptable Power Supply
**The ICAD is a class III appliance

Fail Safe supply options

Figure 4: ICAD 600A-TS

In the event of a power failure, multiple fail safe options are possible, provided that a ICAD-UPS or similar is used.

During power failure, ICAD can be selected to:
- Close ICM/ICMTS
- Open ICM/ICMTS
- Stay in the position it was in, prior to power failure
- Go to a specific valve opening degree

See ICAD-UPS for ICM/ICMTS for further information.

NOTE:
A fail safe supply (battery or UPS) is required.

ICAD-UPS for ICM and ICMTS valves

Figure 5: ICAD-UPS

ICAD-UPS is designed for using with ICM and ICMTS valves.

In the event of power failure, there is a need to make sure that the ICM/ICMTS goes to a safe position. ICAD-UPS can be connected to the ICAD.

The solution of connecting ICMTS with ICAD to ICAD-UPS will give one of the following possibilities in the event of power failure:

- close ICM/ICMTS
- open ICM/ICMTS
- stay
- go to a specific ICM/ICMTS Opening Degree

When power supply has been re-established the system will automatically return to normal operation.

Facts and features

- Industrial product
- Can support up to:
  - 3 pcs. of ICAD 1200B or
  - 8 pcs. of ICAD 600B or ICAD 600B-TS
- Integrated solution - battery and UPS
- Industrial approvals:
  CE, UL, GL (Germanisher Lloyd)
- DIN rail mounting
  - LED indication
  - Green (Power ON)
  - Yellow (Flashing: charging, Constant: Buffer mode (Failsafe supply to ICAD 600A- TS))
  - Red (Battery fully discharged/Battery faulty)
- 24 V DC supply → Same transformer as for ICAD 600A-TS can be used. Only +0.5 A extra load on the transformer
- Check of battery every 60 sec
- Adjustable buffer time[1]. (1, 2, 3, 5, 10, 15, 20, 30 or infinity) = Ensures longer battery life time
- Forced remote shutdown in buffer mode via digital input
- 3 digital volt free relay change over contacts for signals to PLC systems. (Power OK, Buffer mode (failsafe supply to ICAD), Alarm)

[1] Buffer time is defined as the period whereICAD is only powered from the ICAD-UPS (i.e. not from main supply). On ICAD-UPS there is an adjustable buffer time setting (1, 2, 3, 5, 10, 15, 20, 30 min. or infinity). If set to 3, ICAD-UPS will switch off power to connected ICAD 600A-TS, 3 minutes after the power failure occurs. This ensures that the internal battery inside ICAD-UPS does not fully discharge

Code number: **027H0388**

For further information, please refer Instruction guide - AN000086416706.

Applications

Figure 6: Seperate 24 V DC tranformer for both ICAD-UPS and ICAD

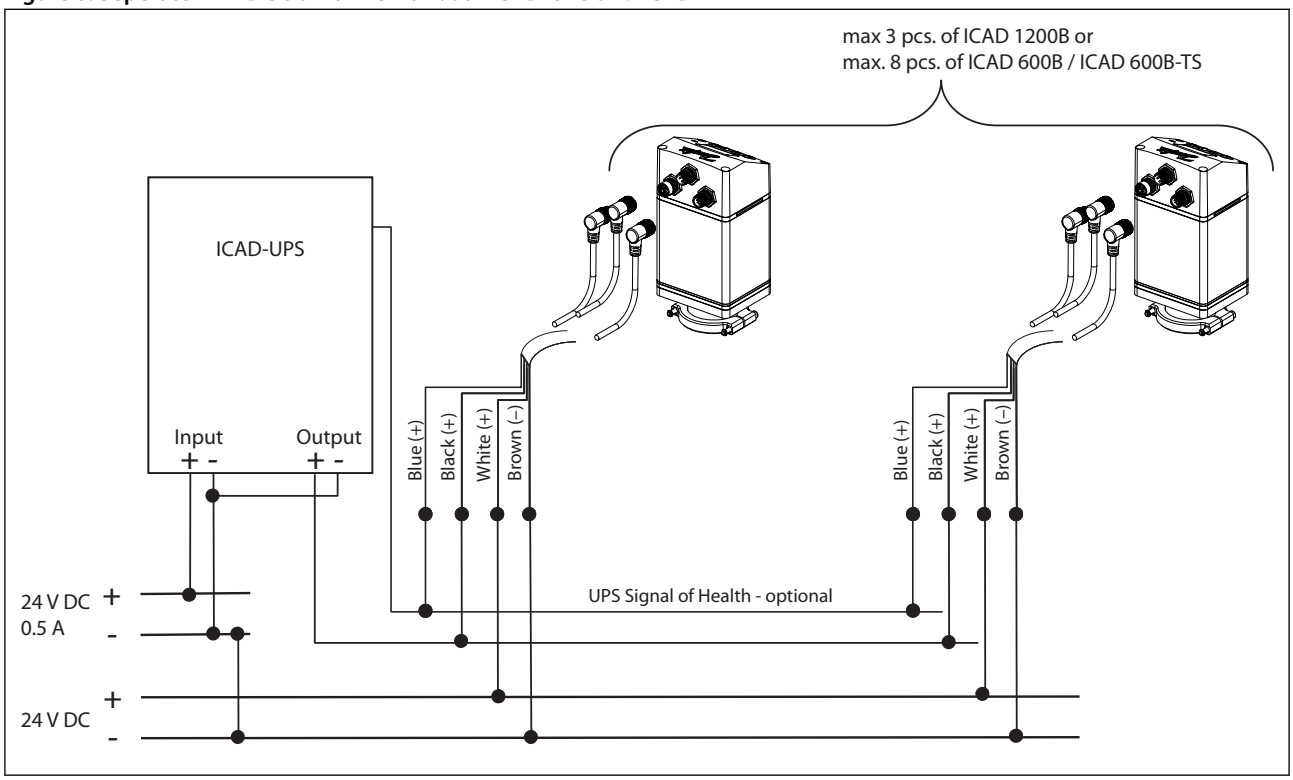

Figure 7: One 24 V DC tranformer for ICAD-UPS and ICAD

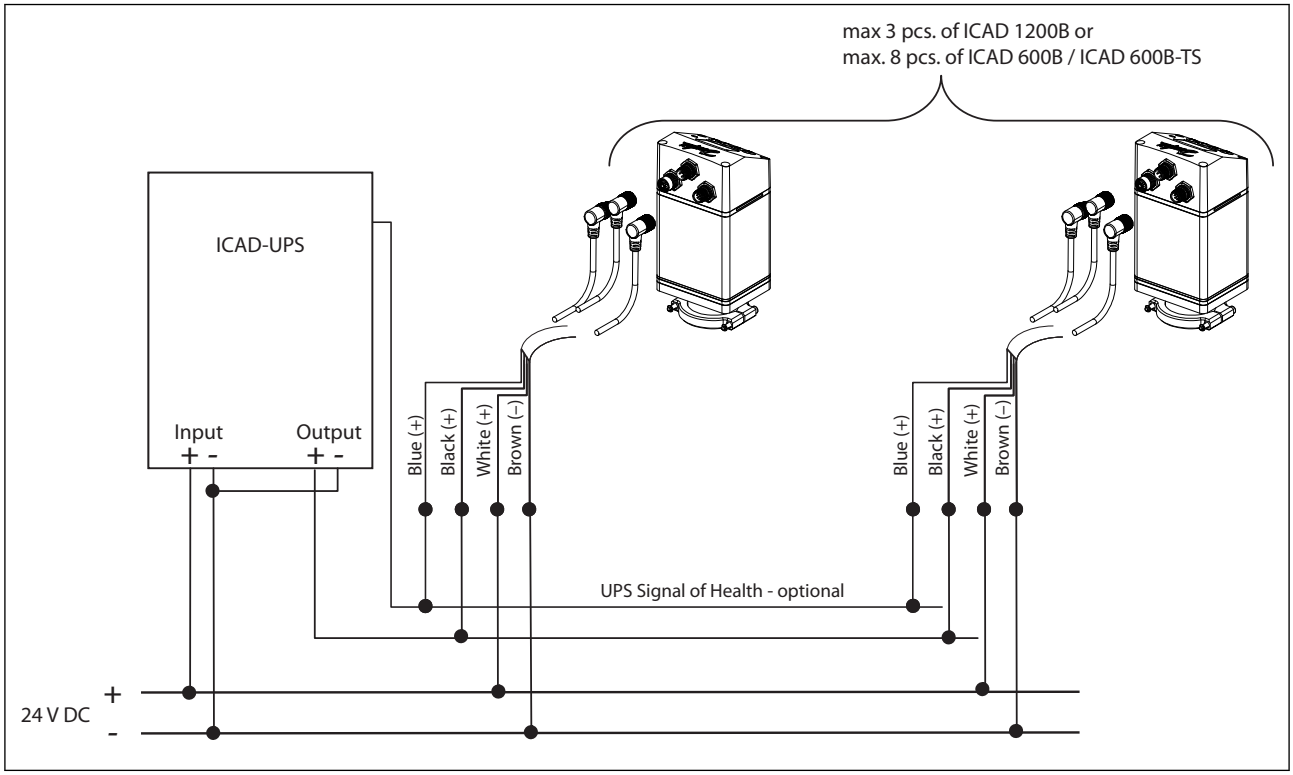

General operation

ICAD actuators are equipped with multiple interfaces (onboard display, Bluethooth mobile app and data communication) from which it is possible to monitor and change the setting of parameters to adapt the actuator and the corresponding ICM and ICMTS valves to the actual refrigeration application.

ICAD light guide

In addition to the onboard display, ICAD B is equiped with an status light guide visible from different angles. The light guide provides a continues status of ICAD B operation in real time.

Figure 8: ICAD light guide

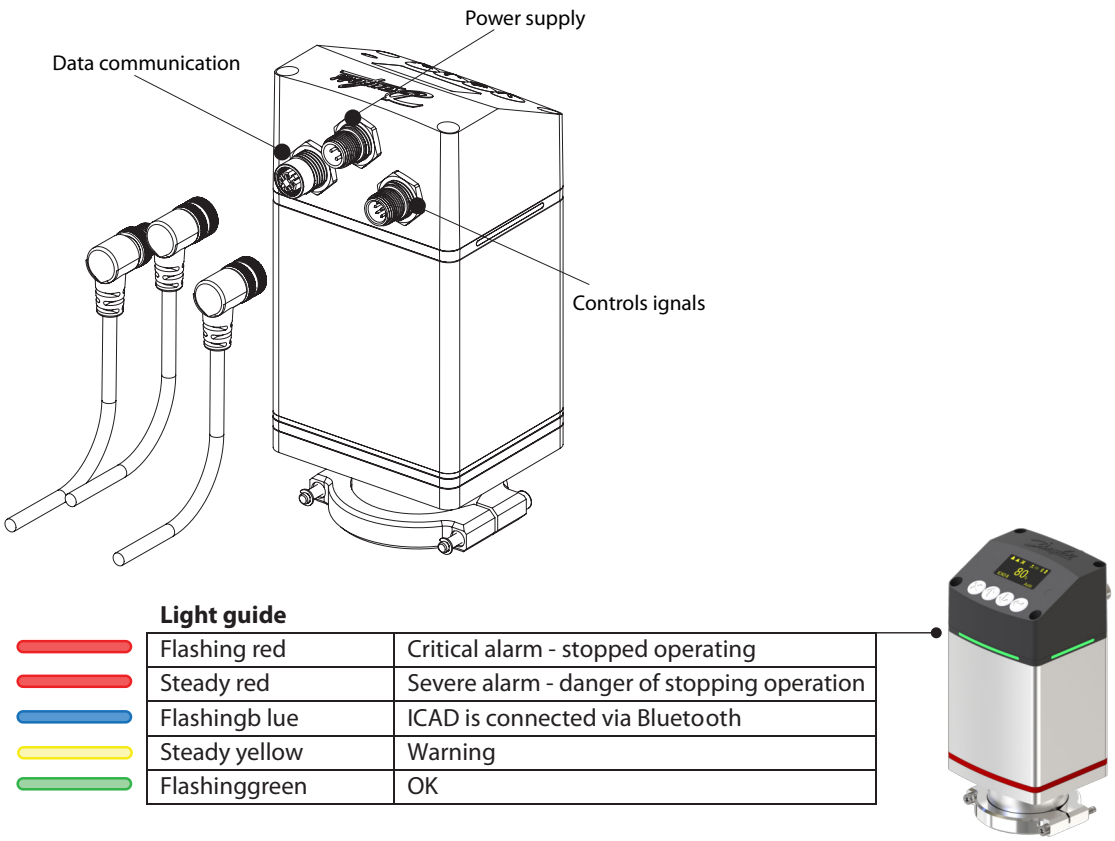

Light guide

Flashing red	Critical alarm - stopped operating
Steady red	Severe alarm - danger of stopping operation
Flashingb lue	ICAD is connected via Bluetooth
Steady yellow	Warning
Flashinggreen	OK

Status bar

The main screen layout and navigation is as described below. ICAD will start up in warning mode as the ICM configuration needs to be defined to start operation. Follow the steps on next page to set this up correctly.

1. To access the ICAD actuator menu, press ENTER button

Figure 9: STATUS BAR

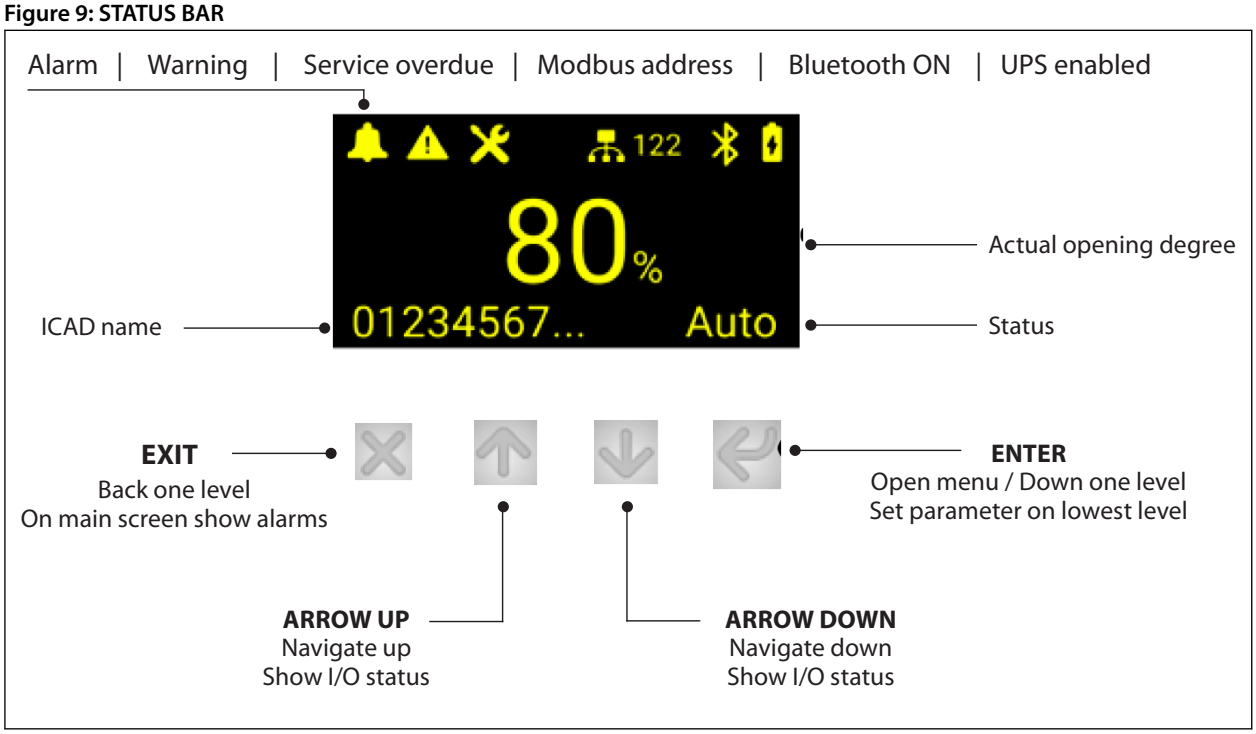

2. Once you are in the menu, use the UP and DOWN arrows to move through the list of parameters
3. To display and/or change the value of the parameter, press ENTER button to view the current settings
   3.1. To change the value of a parameter, use the up or down arrow to establish the new value for that parameter
   3.2. Once the new value for the parameter has been selected, press ENTER button to save the change and return to the menu
   3.3. Repeat this procedure for all parameters
   3.4. Exit from the parameter list by pressing EXIT button or simply wait for the ICAD to return to the main display (approx. 20 seconds)

Ordering

Depending on the valve type and size, there are three types of ICAD actuators (ICAD 600B, ICAD 1200B and ICAD 600B-TS). All three types are available in 4 different variants, with or without display and with communication via either Modbus RTU (RS485) or Modbus TCP/IP (Ethernet).

Figure 10: ICAD 1200B with display

Figure 11: ICAD 1200B without display

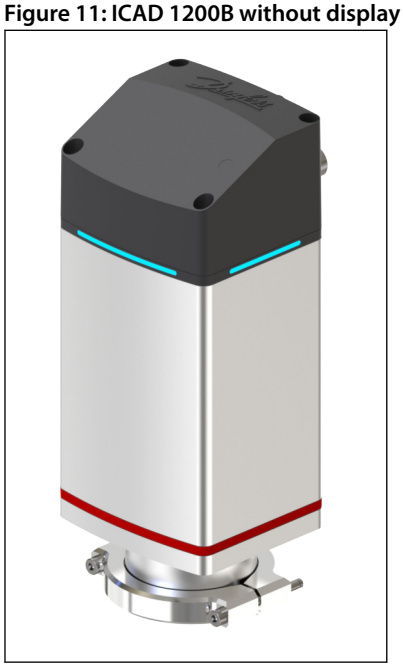

Figure 12: ICAD 600B

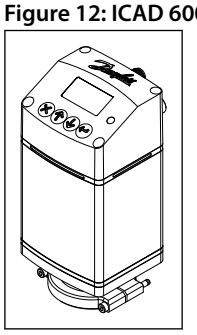

Table 4: ICAD 600B for ICM 20-32

Type	Code no.
ICAD 600B with display, Bluetooth, RS485	027H0485
ICAD 600B with display, Bluetooth, Ethernet	027H0486
ICAD 600B, without display, Bluetooth, RS485	027H0488
ICAD 600B, without display,Bluetooth, Ethernet	027H0489

Figure 13: ICAD 1200B

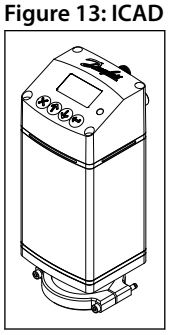

Table 5: ICAD 1200B for ICM 40-150 and CVE

Type	Code no.
ICAD 1200B, with display, Bluetooth, RS485	027H0490
ICAD 1200B, with display, Bluetooth, Ethernet	027H0491
ICAD 1200B, without display, Bluetooth, RS485	027H0493
ICAD 1200B, without display, Bluetooth, Ethernet	027H0494

Figure 14: ICAD 600B-TS

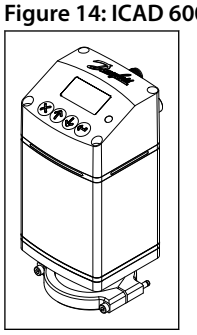

Table 6: ICAD 600B-TS for ICMTS 20-80

Type	Code no.
ICAD 600B-TS, with display, Bluetooth, RS485	027H0495
ICAD 600B-TS, with display, Bluetooth, Ethernet	027H0496
ICAD 600B-TS, without display, Bluetooth, Rs485	027H0498
ICAD 600B-TS, without display, Bluetooth, Ethernet	027H0499

Accessories

Cables should be ordered separately.

Figure 15: Cable for ICAD

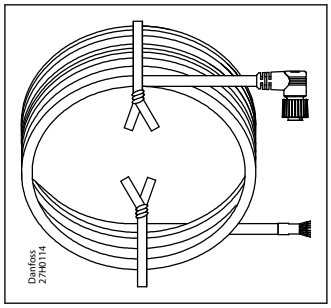

Table 7: ICAD B cable set with 3x cables (power supply, control signal and data communication)

Length	Code no.
ICAD B Cable set 1,5m (3x cables)	027H0464
ICAD B Cable set 3m (3x cables)	027H0465
ICAD B Cable set 10m (3x cables)	027H0466
ICAD B Cable set 15m (3x cables)	027H0467

Table 8: ICAD A and ICAD B cable set with 2x cables (power supply and control signal)

Length	Code no.
ICAD A and ICAD B Cable set 1,5m (2x cables)	027H0426
ICAD A and ICAD B Cable set 3,0m (2x cables)	027H0438
ICAD A and ICAD B Cable set 10m (2x cables)	027H0427
ICAD A and ICAD B Cable set 15m (2x cables)	027H0435

Table 9: Accessories

Type	Code no.
Service kit ICAD 600B (10 pcs of o-rings for magnetic coupling)	027H0428
Service kit ICAD 1200B and ICAD 600B-TS (10 pcs of o-rings for magnetic coupling)	027H0429

Figure 16: ICAD-UPS

Table 10: ICAD-UPS

Type	Code no.
ICAD-UPS	027H0388

Figure 17: ICAD Protection Cap

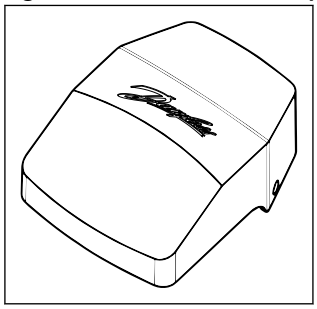

Table 11: ICAD Protection Cap

Type	Code no.
ICAD-B Protective cover	027H0468

Certificates, declarations and approvals

The list contains all certificates, declarations, and approvals for this product type. Individual code number may have some or all of these approvals, and certain local approvals may not appear on the list.

Some approvals may change over time. You can check the most current status at danfoss.com or contact your local Danfoss representative if you have any questions.

Table 12: ICAD B

File name	Document type	Document topic	Approvals Authority
E258350	Electrical - Safety Certificate	-	UL
027R0723	Manufacturers Declaration	FCC	Danfoss

Danfoss A/S
Climate Solutions • danfoss.com • +45 7488 2222

Any information, including, but not limited to information on selection of product, its application or use, product design, weight, dimensions, capacity or any other technical data in product manuals, catalogues descriptions, advertisements, etc. and whether made available in writing, orally, electronically, online or via download, shall be considered informative, and is only binding if and to the extent, explicit reference is made in a quotation or order confirmation. Danfoss cannot accept any responsibility for possible errors in catalogues, brochures, videos and other material.
Danfoss reserves the right to alter its products without notice. This also applies to products ordered but not delivered provided that such alterations can be made without changes to form, fit or function of the product.
All trademarks in this material are property of Danfoss A/S or Danfoss group companies. Danfoss and the Danfoss logo are trademarks of Danfoss A/S. All rights reserved.